Welch Allyn®
ELI®150c/ ELI® 250c

12-LEAD RESTING ELECTROCARDIOGRAPH

USER MANUAL

Manufactured by Welch Allyn, Inc. Skaneateles Falls, NY U.S.A.

CE 0459

CAUTION: *Federal law restricts this device to sale by or on the order of a physician.*

© 2019 Welch Allyn This document contains confidential information that belongs to Welch Allyn, Inc., No part of this document may be transmitted, reproduced, used, or disclosed outside of the receiving organization without the express written consent of Welch Allyn, Inc., is a registered trademark of Welch Allyn, Inc., E-Scribe, ELI, and VERITAS are trademarks of Welch Allyn, Inc., Cisco® is the registered trademark of Cisco Systems, Inc. DICOM® is the registered trademark of the National Electrical Manufacturers Association for its standards publications relating to digital communications of medical information. Software V2.1.0. 2016-2

For patent information, please visit www.welchallyn.com/patents

For information about any Welch Allyn product, visit: https://www.welchallyn.com/en/about-us/locations.html

Customer Service and Technical Support: https://www.welchallyn.com/en/other/contact-us.html 1.888.667.8272, mor_tech.support@hillrom.com

REF

9515-177-70-ENG Rev H

Revision date 2019-10

#

(150c) 901129 ELECTROCARDIOGRAPH

(250c) 901131 ELECTROCARDIOGRAPH

Welch Allyn, Inc.
4341 State Street Road
Skaneateles Falls, NY 13153 USA

www.welchallyn.com

EC REP EU IMPORTER

Welch Allyn Limited
Navan Business Park, Dublin Road,
Navan, Co. Meath C15 AW22
Ireland

TABLE OF CONTENTS

NOTICES **3**

Manufacturer's Responsibility 3
Responsibility of the Customer 3
Equipment Identification 3
Copyright and Trademark Notices 3
Other Important Information 3
Notice to EU Users and /or Patients: 3

WARRANTY INFORMATION **5**

Your Welch Allyn Warranty 5

USER SAFETY INFORMATION **7**

Warning(s) 7
Caution(s) 10
Note(s) 10
Wireless Data Transmission 12
WLAN Option 12

EQUIPMENT SYMBOLS AND MARKINGS **15**

Symbol Delineation 15

GENERAL CARE **17**

Precautions 17
Inspection 17
Cleaning and Disinfecting 17
Cleaning the Thermal Printer 18
Disposal 18

ELECTROMAGNETIC COMPATIBILITY (EMC) **19**

Guidance and Manufacturer's Declaration: Electromagnetic Emissions 20
Guidance and Manufacturer's Declaration: Electromagnetic Immunity 20
Guidance and Manufacturer's Declaration: Electromagnetic Immunity 21
Recommended Separation Distances Between Portable and Mobile RF Communications Equipment and the Equipment 22

INTRODUCTION **29**

Manual Purpose 29
Audience 29
Indications for Use 29
System Description 30
Figure 1-4, Base 32
ELI 150c Specifications 36
ELI 250c Specifications 37
Accessories 38

EQUIPMENT PREPARATION **41**

Initial Startup 41
Connecting the Acquisition Module 41
Loading Paper 42

Applying Power 45
Low Battery Conditions 45
Setting Time and Date 46
Using the WAM or AM12 Acquisition Module 46
Installing the WLAN Antenna 46
Patient Preparation 47
Preparing Patient Skin 47
Patient Hookup 47
To Attach the Electrodes 47
Patient Demographic Entry 49
Entering Symbols 50
Auto-Fill ID 50
ECG Acquisition, Printing, Storage 50
Best 10 Seconds Selection 51
Acquiring Rhythm Strips 52

SYSTEM SETTINGS 55

Setting Technician Password 55
Configuration Menus 55
Summary of Configuration Menus 56
Configuration Settings 59

ECG DIRECTORY 69

ECG Order List 70
ECG Transmission 71
Modem Transmission 72
MODEM COUNTRY CODE LIST 73
LAN Transmission 76
Ethernet Status LEDs 76
WLAN Transmission 78
GPRS Mobile Transmission 80
Orders Download 81
Custom ID Download 81
USB Memory 82
Connecting the ELI 150c or ELI 250c to a PC 83
Network Test 84

MAINTENANCE AND TROUBLESHOOTING 85

System Troubleshooting Chart 85
ECG Troubleshooting Chart 85
Transmission Troubleshooting Chart 85
Power Off the Device 87
Test Operation 87
Recommendations to Biomedical Staff 87
Battery Maintenance 87

NOTICES

Manufacturer's Responsibility

Welch Allyn, Inc., is responsible for the effects on safety and performance only if:

- Assembly operations, extensions, readjustments, modifications, or repairs are carried out only by persons authorized by Welch Allyn, Inc.,
- The device is used in accordance with the instructions for use.

Responsibility of the Customer

The user of this device is responsible for ensuring the implementation of a satisfactory maintenance schedule. Failure to do so may cause undue failure and possible health hazards.

Equipment Identification

Welch Allyn, Inc., equipment is identified by a serial and reference number on the back of the device. Care should be taken so that these numbers are not defaced.

Copyright and Trademark Notices

This document contains information that is protected by copyright. All rights are reserved. No part of this document may be photocopied, reproduced, or translated to another language without prior written consent of Welch Allyn, Inc.,

Other Important Information

The information in this document is subject to change without notice.

Welch Allyn, Inc., makes no warranty of any kind with regard to this material including, but not limited to, implied warranties of merchantability and fitness for a particular purpose. Welch Allyn, Inc., assumes no responsibility for any errors or omissions that may appear in this document. Welch Allyn, Inc., makes no commitment to update or to keep current the information contained in this document.

Notice to EU Users and /or Patients:

Any serious incident that has occurred in relation to the device, should be reported to the manufacturer and the competent authority of the Member State in which the user and/or patient is established.

WARRANTY INFORMATION

Your Welch Allyn Warranty

WELCH ALLYN, INC., (hereafter referred to as "Welch Allyn ") warrants that components within Welch Allyn products (hereafter referred to as "Product/s") will be free from defects in workmanship and materials for the number of years specified on documentation accompanying the product, or previously agreed to by the purchaser and Welch Allyn , or if not otherwise noted, for a period of twenty-four (24) months from the date of shipment.

Consumable, disposable or single use products such as, but not limited to, PAPER or ELECTRODES are warranted to be free from defects in workmanship and materials for a period of 90 days from the date of shipment or the date of first use, whichever is sooner.

Reusable product such as, but not limited to, BATTERIES, BLOOD PRESSURE CUFFS, BLOOD PRESSURE HOSES, TRANSDUCER CABLES, Y-CABLES, PATIENT CABLES, LEAD WIRES, MAGNETIC STORAGE MEDIUMS, CARRY CASES or MOUNTS, are warranted to be free from defects in workmanship and materials for a period of 90 days. This warranty does not apply to damage to the Product/s caused by any or all of the following circumstances or conditions:

a) Freight damage;

b) Parts and/or accessories of the Product/s not obtained from or approved by Welch Allyn ;

c) Misapplication, misuse, abuse, and/or failure to follow the Product/s instruction sheets and/or information guides;

d) Accident; a disaster affecting the Product/s;

e) Alterations and/or modifications to the Product/s not authorized by Welch Allyn ;

f) Other events outside of Welch Allyn 's reasonable control or not arising under normal operating conditions.

THE REMEDY UNDER THIS WARRANTY IS LIMITED TO THE REPAIR OR REPLACEMENT WITHOUT CHARGE FOR LABOR OR MATERIALS, OR ANY PRODUCT/S FOUND UPON EXAMINATION BY Welch Allyn TO HAVE BEEN DEFECTIVE. This remedy shall be conditioned upon receipt of notice by Welch Allyn of any alleged defects promptly after discovery thereof within the warranty period. Welch Allyn's obligations under the foregoing warranty will further be conditioned upon the assumption by the purchaser of the Product/s (i) of all carrier charges with respect to any Product/s returned to Welch Allyn's principal place or any other place as specifically designated by Welch Allyn or an authorized distributor or representative of Welch Allyn, and (ii) all risk of loss in transit. It is expressly agreed that the liability of Welch Allyn is limited and that Welch Allyn does not function as an insurer. A purchaser of a Product/s, by its acceptance and purchase thereof, acknowledges and agrees that Welch Allyn is not liable for loss, harm, or damage due directly or indirectly to an occurrence or consequence therefrom relating to the Product/s. If Welch Allyn should be found liable to anyone under any theory (except the expressed warranty set forth herein) for loss, harm, or damage, the liability of Welch Allyn shall be limited to the lesser of the actual loss, harm, or damage, or the original purchase price of the Product/s when sold.

EXCEPT AS SET FORTH HEREIN WITH RESPECT TO REIMBURSEMENT OF LABOR CHARGES, A PURCHASER'S SOLE EXCLUSIVE REMEDY AGAINST Welch Allyn FOR CLAIMS RELATING TO THE PRODUCT/S FOR ANY AND ALL LOSSES AND DAMAGES RESULTING FROM ANY CAUSE SHALL BE THE REPAIR OR REPLACEMENT OF DEFECTIVE PRODUCT/S TO THE EXTENT THAT THE DEFECT IS NOTICED AND Welch Allyn IS NOTIFIED WITHIN THE WARRANTY PERIOD. IN NO EVENT, INCLUDING THE CLAIM FOR NEGLIGENCE, SHALL Welch Allyn BE LIABLE FOR INCIDENTAL, SPECIAL, OR CONSEQUENTIAL DAMAGES, OR FOR ANY OTHER LOSS, DAMAGE, OR EXPENSE OF ANY KIND, INCLUDING LOSS OF PROFITS, WHETHER UNDER TORT, NEGLIGENCE OR STRICT LIABILITY THEORIES OF LAW, OR OTHERWISE. THIS WARRANTY IS EXPRESSLY IN LIEU OF ANY OTHER WARRANTIES, EXPRESS OR IMPLIED, INCLUDING, BUT NOT LIMITED TO THE IMPLIED WARRANTY OF MERCHANTABILITY AND THE WARRANTY OF FITNESS FOR A PARTICULAR PURPOSE.

USER SAFETY INFORMATION

WARNING: Means there is the possibility of personal injury to you or others.

Caution: Means there is the possibility of damage to the device.

Note: Provides information to further assist in the use of the device.

Warning(s)

- This manual gives important information about the use and safety of this device. Deviating from operating procedures, misuse or misapplication of the device, or ignoring specifications and recommendations could result in increased risk of harm to users, patients and bystanders, or damage to the device.

- Device captures and presents data reflecting a patient's physiological condition that when reviewed by a trained physician or clinician can be useful in determining a diagnosis; however, the data should not be used as a sole means for determining a patient's diagnosis.

- Users are expected to be licensed clinical professionals knowledgeable about medical procedures and patient care, and adequately trained in the use of this device. Before attempting to use this device for clinical applications, the operator must read and understand the contents of the user manual and other accompanying documents. Inadequate knowledge or training could result in increased risk of harm to users, patients and bystanders, or damage to the device. Contact Welch Allyn service for additional training options.

- To ensure that electrical safety is maintained during operation from AC (~) power, the device must be plugged into a hospital-grade outlet.
- Only use parts and accessories supplied with the device and/or available through Welch Allyn, Inc.,
- Patient cables intended for use with the device include series resistance (9 Kohm minimum) in each lead for defibrillation protection. Patient cables should be checked for cracks or breakage prior to use.

- Conductive parts of the patient cable, electrodes, and associated connections of type CF applied parts, including the neutral conductor of the patient cable and electrodes, should not come into contact with other conductive parts including earth ground.

- ECG electrodes could cause skin irritation; patients should be examined for signs of irritation or inflammation.

- To avoid the possibility of serious injury or death during patient defibrillation, do not come into contact with device or patient cables. Additionally, proper placement of defibrillator paddles in relation to the electrodes is required to minimize harm to the patient.

- This device was designed to use the electrodes specified in this manual. Proper clinical procedure must be employed to prep the electrode sites and to monitor the patient for excessive skin irritation, inflammation, or other adverse reactions. Electrodes are intended for short-term use and should be removed from the patient promptly following testing.

- To avoid potential for spread of disease or infection, single-use disposable components (e.g., electrodes) must not be reused. To maintain safety and effectiveness, electrodes must not be used beyond their expiration date.

- A possible explosion hazard exists. Do not use the device in the presence of a flammable anesthetic mixture.
- Where the integrity of external protective earth conductor arrangement is in doubt, the device shall be operated from its internal electrical power source.

- To improve immunity to potential interfering electromagnetic signals, shielded cabling is recommended when connecting the device to a network.

- Medical devices have been designed to have a higher degree of protection against electric shock than, for instance, information technology equipment because patients often are connected to multiple devices and also may be more prone to the adverse effect of electric currents than healthy persons. All equipment that is connected to the patient, can be touched by the patient, or can be touched by another person while that person touches the patient at the same time, should have the same level of protection against electric shock as medical equipment. The ELI 150c and ELI 250c are medical devices that have been designed to be connected to other devices for the purpose of receiving and transmitting data. Certain measures must be taken to prevent the risk of excessive electric current flow through the operator or patient when connected:

    - All electrical equipment that is **not medical electrical equipment** must be placed outside of the "patient environment," defined by applicable safety standards to be at least 1.5 meters (5 feet) from the patient. Alternatively, non-medical equipment may be provided with additional protection such as an additional protective earth connection.

    - All **medical electrical equipment** that has a physical connection to the ELI 150c/ELI 250c or the patient, or is in the patient environment must comply with applicable safety standards for medical electrical devices.

    - All electrical equipment that is **not medical electrical equipment** and has a physical connection to the ELI 150c/ELI 250c must comply with applicable safety standards, such as IEC 60950 for information technology equipment. This includes information network equipment connected through the LAN connector.

    - Conductive (metal) parts that can be touched by the operator in normal use and that are connected to **non-medical equipment** should not be brought into the patient environment. Examples are connectors for shielded Ethernet or USB cables.

    - If **multiple devices** are connected to each other or to the patient, device chassis and patient leakage currents may be increased, and should be measured for compliance with applicable standards for medical electrical systems.

    - Avoid the use of **portable multiple socket outlets**. If used and not compliant with medical electrical device standards, an additional protective earth connection is required.

    - After defibrillation pulse, electrocardiograph has a maximum recovery time of 5 seconds.

    - To prevent electric shock due to unequal ground potentials that may exist between points of a distributed network system or fault conditions in external network connected equipment, network cable shielding (where used) must be connected to protective earth ground appropriate to the area where the device is used.

- The device has not been designed for use with high-frequency (HF) surgical equipment and does not provide a protective means against hazards to the patient.

- When the 40 Hz filter is used, the frequency response requirement for diagnostic ECG equipment cannot be met. The 40 Hz filter significantly reduces high-frequency components of the ECG and pacemaker spike amplitudes, and is recommended only if high-frequency noise cannot be reduced by proper procedures.

- The quality of the signal produced by the device may be adversely affected by the use of other medical equipment, including but not limited to defibrillators and ultrasound machines.

- For proper operation and the safety of users or patients and bystanders, equipment and accessories must be connected only as described in this manual. Do not connect a telephone line cable to the LAN connector.

- Some Welch Allyn electrocardiographs can be equipped with a GPRS (cellular modem) or wireless LAN (WLAN) module for transmitting ECG records. Device labeling and the presence of an antenna port will indicate if your device is equipped with such a module. If so equipped, the following notices apply:

    - The GPRS module operates in allocated frequency bands depending on the model. Identification of the installed GPRS module can be found on a label on the bottom of the device.
        - MultiTech Systems, Inc. Model MTSMC-H5: 850/900/1700(AWS)/1900/2100 MHz
    - The WLAN identification can be found on a label on the bottom of the device.
        - B&B Electronics Model WLNN-AN-MR551: 2400 MHz
          (model subject to change without notice)

- Use of the GPRS or WLAN module may interfere with other equipment operating in the vicinity. Check with local authorities or spectrum management officials in your facility to determine if restrictions apply to the use of this feature in your area.

- Do not transmit via the GPRS or WLAN module with a missing or damaged antenna. Replace a damaged antenna immediately.

- Use only the antenna supplied for use with this device. Unauthorized antennas, modifications, or attachments could damage the GPRS module and may contravene local RF emission regulations or invalidate type approval.

- To ensure compliance with current regulations limiting both maximum RF output power and human exposure to radio frequency radiation, a separation distance of at least 20 cm must be maintained between the device's antenna and the head and body of the user and any nearby persons at all times. To help prevent degradation of RF signal and to avoid excess RF energy absorption, do not touch the antenna during data transmission.

- The GPRS and WLAN modules comply with applicable RF safety standards including standards and recommendations for the protection of public exposure to RF electromagnetic energy that have been established by governmental bodies and other qualified organizations, such as the following:
    - Federal Communications Commission (FCC)
    - Directives of the European Community
    - Directorate General V in Matters of Radio Frequency Electromagnetic Energy

- Proper functioning backup items such as spare lead wires, front-end device, and other equipment are recommended on hand to prevent delayed treatment due to an inoperable device.

Caution(s)

- To prevent possible damage to the keyboard, do not use sharp or hard objects to depress keys, only use fingertips.
- Do not attempt to clean the device or patient cables by submersing into a liquid, autoclaving, or steam cleaning as this may damage equipment or reduce its usable life. Wipe the exterior surfaces with a warm water and mild detergent solution and then dry with a clean cloth. Use of unspecified cleaning/disinfecting agents, failure to follow recommended procedures, or contact with unspecified materials could result in increased risk of harm to users, patients and bystanders, or damage to the device.
- No user-serviceable parts inside. Screw removal by qualified service personnel only. Damaged or suspected inoperative equipment must be immediately removed from use and must be checked/repaired by qualified service personnel prior to continued use.
- The rechargeable internal battery is a sealed lead-acid type and it is totally maintenance free. If the battery appears to become defective, refer to Welch Allyn Service Department.
- Do not pull or stretch patient cables as this could result in mechanical and/or electrical failures. Patient cables should be stored after forming them into a loose loop.
- No calibration or special equipments are needed for the proper operation or maintenance of the device.
- When necessary, dispose of the device, its components and accessories (e.g., batteries, cables, electrodes), and/or packing materials in accordance with local regulations.
- Use only No. 26 AWG or larger telecommunication line cord.

Note(s)

- Patient movements may generate excessive noise that may affect the quality of the ECG traces and the proper analysis performed by the device.
- Proper patient preparation is important to proper application of ECG electrodes and operation of the device.
- The algorithm detecting electrode misplacements is based on normal physiology and ECG lead order, and tries to identify the most likely switch; however, it is advisable to check the other electrode positions in the same group (limb or chest).
- There is no known safety hazard if other equipment, such as pacemakers or other stimulators, is used simultaneously with the device; however, disturbance to the signal may occur.
- A square wave presentation on the display while using the WAM may be due to the WAM being turned off, having no battery, not being paired correctly, operating out of range, or due to a calibration error. Review the

LED indicator on the WAM to ensure the unit is turned on, has proper battery level, is paired correctly, and is within recommended proximity of the electrocardiograph, or power cycle the WAM to re-calibrate.

- A square wave presentation on the display while using the AM12 may be due to improper auto-calibration. Power cycle the AM12 or the electrocardiograph.

- If electrode is not properly connected to the patient, or one or more of the patient cable lead wires is damaged, display will indicate a lead fault for the lead(s) where the condition is present and if the signal is being printed, the respective lead(s) will print out as a square wave.

- As defined by IEC 60601-1 and IEC 60601-2-25, the device is classified as follows:
  - Class I equipment or internally powered.
  - Type CF defibrillation-proof applied parts.
  - Ordinary equipment.
  - Equipment not suitable for use in the presence of a flammable anesthetic mixture.
  - Continuous operation.

  NOTE: *From a safety perspective, per IEC 60601-1 and derivative standards/norms, this device is declared to be "Class I" and uses a three-prong inlet to ensure an earth connection is made along with mains. The ground terminal on the mains inlet is the only protective earth point in the device. Exposed metal accessible during normal operation is double insulated from mains. Internal connections to earth ground are functional earth.*

- This device is intended to be used in a hospital or doctor's office setting, and should be used and stored according to the environmental conditions specified below:

Operating temperature:	+10° to +40°C (+50° to +104°F)
Operating humidity:	10% to 95% RH, non-condensing
Storage temperature:	-40° to +70°C (-40° to +158°F)
Storage humidity:	10% to 95% RH, non-condensing
Atmospheric pressure:	500 hPa to 1060 hPa

- WAM™ (wireless acquisition module) must be paired to electrocardiograph before operation.

- Device must be configured at the factory for use with the WAM.

- After operating the device using battery power, always reconnect the power cord. This ensures that the batteries will be automatically recharged for the next time you use the device.

- The device is UL classified.

CLASSIFIED c UL US
E467322

WITH RESPECT TO ELECTRIC SHOCK, FIRE AND MECHANICAL HAZARDS ONLY IN ACCORDANCE WITH IEC60601-1, CAN/CSA CC22.2 No. 601.1, AND IEC60601-2-25

- The device is a member of the ELI 1xx or ELI 2xx Series 2 electrocardiograph family.

Wireless Data Transmission

- Some Welch Allyn electrocardiographs can be equipped with an optional wireless data transmission module (WLAN or GPRS mobile). Both these technologies use radios to transmit data to a Welch Allyn receiving application. Due to the nature of radio transmissions, it's possible that, due to the characteristics of the environment where the device is located, some other RF sources may interfere with the transmission generated by the device. Welch Allyn has tested the coexistence of the device with other devices that can interfere such as devices using WLAN, Bluetooth radio, and/or cell phones. Although the current technology allows a very successful rate of transmission, it's possible that in some rare occurrences, the system may not perform at its best resulting in a "failed transmission." When this occurs, patient data will not be erased from the device nor stored in the receiving application, ensuring that partial or corrupted data are not made available to the receiving station. If the failure mode persists the user should move to a position where the RF signals may propagate better and allow successful transmissions.

WLAN Option

- Wireless options transmit in the 2.4 GHz or 5 GHz range. Other nearby wireless devices in the same frequency range may cause interference. If possible, move or turn off other devices to minimize potential interference.

- The Wireless LAN module used is compliant with the IEEE 802.11 a, b, g and n standards.

- Access Points used should respect IEEE 802.11 standards as well as local Radio Frequency regulations. The device will scan the available channels and connect to the Access Point on the channel where the SSID that is configured on the device is available.

- The following table shows the radio channels allocated in different geographic areas in the world. For bands 802.11b and g, only channels 1, 6, 11 and 14 (Japan only) are non-overlapping; for band 802-11a, channels shown represent non-overlapping channel numbers.

Band	Typical Power	Region	Frequency Range (GHz)	No. of channels	Channel numbers
802.11b	15 dBm / 32 mW	USA/Canada	2.401 - 2.473	11	1 – 11
		Europe	2.401 - 2.483	13	1 – 13
		Japan	2.401 - 2.495	14	1 – 14
802.11g	13 dBm / 18 mW	USA/Canada	2.401 - 2.473	11	1 – 11
		Europe	2.401 - 2.483	13	1 – 13
		Japan	2.401 - 2.483	13	1 – 13
802.11a	17 dBm / 50 mW	USA/Canada	5.15 - 5.35, 5.725 - 5.825	13	36,40,44,48,52,56,60,64,149,153,157, 161,165
		Europe	5.15 - 5.35, 5.47 - 5.725	19	36,40,44,48,52,56,60,64,100,104,108, 112,116,120,124,128,132,136,140
		Japan	4.91 – 4.99, 5.15 - 5.35, 5.47 - 5.725	23	36,40,44,48,52,56,60,64,100,104,108, 112,116,120,124,128,132,136,140,184 188,192,196
		China	5.725 - 5.825	5	149,153,157,161,165

- In order to achieve the best transmission rate, it is necessary that the facility where the device is operated can provide good area coverage. Please consult the IT personnel of the facility to verify the proper WLAN availability in the area where the device will be used.

- RF wave propagation may be blocked or reduced by the environment where the device is used. Most common areas where this may occur are: shielded rooms, elevators, underground rooms. In all such situations it is recommended to move the device to a proper location where the WLAN frequencies are available.

EQUIPMENT SYMBOLS AND MARKINGS

Symbol Delineation

	CAUTION The caution statements in this manual identify conditions or practices that could result in damage to the equipment or other property, or loss of data.
	WARNING The warning statements in this manual identify conditions or practices that could lead to illness, injury, or death. In addition, when used on a patient applied part, this symbol indicates defibrillation protection is in the cables. Warning symbols will appear with a grey background in a black and white document.
	Alternating current
	Protective earth
	Telephone line (modem)
	Network (LAN)
	Defibrillator-proof type CF applied part
	USB port
	Input
	ON/OFF (power)
STOP	Stop (of action)

↑	Shift key (to enter upper case text)
↵	Enter key (accept data/return)
ECG	Initiate printing of 12-lead ECG
RHY	Initiate printing of continuous rhythm strip
SYNC	Transmit, receive and time sync operation depending upon configuration settings
	Do not dispose as unsorted municipal waste. Requires separate handling for waste disposal according to local requirements
	Antenna
CE 0459	Indicates compliance to applicable European Union directives
	Non-ionizing electromagnetic radiation
7d welchallyn.com	Follow instructions/directions for use (DFU) -- mandatory action. A copy of the DFU is available on this website. A printed copy of the DFU can be ordered from Welch Allyn for delivery within 7 calendar days.
MD	Medical Device
REF	Reorder Number
#	Model Identifier

GENERAL CARE

Precautions

- Turn off the device before inspecting or cleaning.
- Do not immerse the device in water.
- Do not use organic solvents, ammonia-based solutions, or abrasive cleaning agents which may damage equipment surfaces.

Inspection

Inspect your equipment daily prior to operation. If you notice anything that requires repair, contact an authorized service person to make the repairs.

- Verify that all cords and connectors are securely seated.
- Check the case and chassis for any visible damage.
- Inspect cords and connectors for any visible damage.
- Inspect keys and controls for proper function and appearance.

Cleaning and Disinfecting

1. Disconnect the power source. Remove cables and lead wires from device before cleaning.
2. For general cleaning of cables and lead wires, use a soft, lint-free cloth lightly moistened with a mild soap and water solution. Wipe and air dry.
3. For disinfecting the exterior surfaces of the device, patient acquisition module, cables, and lead wires, wipe exterior using:

   Clorox Healthcare® Bleach Germicidal Wipes (use according to instructions on product label), *or*

   a soft, lint-free cloth with a solution of Sodium Hypochlorite (10% household bleach and water solution) minimum 1:500 dilution (minimum 100 ppm free chlorine) and maximum 1:10 dilution as recommended by the APIC Guidelines for Selection and Use of Disinfectants

   ⚠ ***CAUTION**:*

   Prevent liquid from penetrating the device and do not attempt to clean/disinfect the device or patient cables by submerging into a liquid, autoclaving, or steam cleaning.

   Do not expose cables to strong ultra-violet radiation.

   Do not sterilize the device or lead wires with Ethylene Oxide (EtO) gas.

   Do not immerse cable ends or lead wires; immersion can cause metal corrosion. Use caution with excess liquid as contact with metal parts may cause corrosion.

   Do not use excessive drying techniques such as forced heat.

   Improper cleaning products and processes can damage the device, produce brittle lead wires and cables, corrode the metal, and void the warranty. Use care and proper procedure whenever cleaning or maintaining the device.

Cleaning the Thermal Printer

To clean the printer

1. Disconnect the power source.
2. Clean the exterior surface of the unit with a damp cloth using a solution of mild dishwashing detergent diluted in water.
3. After washing, thoroughly dry off the unit with a clean, soft cloth or paper towel.

To clean the print head

NOTE: *Do not let soap or water come into contact with the writer, plugs, jacks, or vents.*

1. Open writer door.
2. Lightly rub print head with an alcohol pad.
3. Wipe with a clean cloth to remove alcohol residue.
4. Allow print head to air dry.
5. Clean the platen by using adhesive tape. Apply the tape and pull it off. Rotate roller and repeat until entire roller is clean.

Disposal

This product and its accessories must be disposed of according to local laws and regulations. Do not dispose of this product as unsorted municipal waste. For more specific disposal information see www.welchallyn.com/weee.

ELECTROMAGNETIC COMPATIBILITY (EMC)

Electromagnetic compatibility with surrounding devices should be assessed when using the device.

An electronic device can either generate or receive electromagnetic interference. Testing for electromagnetic compatibility (EMC) has been performed on the device according to the international standard for EMC for medical devices (IEC 60601-1-2). This IEC standard has been adopted in Europe as the European Norm (EN 60601-1-2).

The device should not be used adjacent to, or stacked on top of other equipment. If the device must be used adjacent to or stacked on top of other equipment, verify that the device operates in an acceptable manner in the configuration in which it will be used.

Fixed, portable, and mobile radio frequency communications equipment can affect the performance of medical equipment. See the appropriate EMC table for recommended separation distances between the radio equipment and the device.

The use of accessories, transducers, and cables other than those specified by Welch Allyn may result in increased emissions or decreased immunity of the equipment.

Guidance and Manufacturer's Declaration: Electromagnetic Emissions

The equipment is intended for use in the electromagnetic environment specified in the table below. The customer or the user of the equipment should ensure that it is used in such an environment.

Emissions Test	Compliance	Electromagnetic Environment: Guidance
RF Emissions CISPR 11	Group 1	The equipment uses RF energy only for its internal function. Therefore, its RF emissions are very low and not likely to cause any interference in nearby electronic equipment.
RF Emissions CISPR 11	Class A	The equipment is suitable for use in all establishments other than domestic and those directly connected to the public low-voltage power supply network that supplies buildings used for domestic purposes.
Harmonic Emissions IEC 61000-3-2	Complies	
Voltage Fluctuations/ Flicker Emissions IEC 61000-3-3	Complies	

Guidance and Manufacturer's Declaration: Electromagnetic Immunity

The equipment is intended for use in the electromagnetic environment specified in the table below. The customer or the user of the equipment should ensure that it is used in such an environment.

Emissions Test	Compliance	Compliance Level	Electromagnetic Environment: Guidance
Electrostatic discharge (ESD) IEC 61000-4-2	+/- 6 kV contact +/- 8 kV air	+/- 6 kV contact +/- 8 kV air	Floors should be wood, concrete, or ceramic tile. If floors are covered with synthetic material, the relative humidity should be at least 30%.
Electrical fast transient/burst IEC 61000-4-4	+/- 2 kV for power supply lines +/- 1 kV for input/output lines	+/- 2 kV for power supply lines +/- 1 kV for input/output lines	Mains power quality should be that of a typical commercial or hospital environment.
Surge IEC 61000-4-5	+/- 1 kV differential mode +/- 2 kV common mode	+/- 1 kV differential mode +/- 2 kV common mode	Mains power quality should be that of a typical commercial or hospital environment.
Voltage dips, short interruptions, and voltage variations on power supply input lines IEC 61000-4-11	<5% UT (>95% dip in UT) for 0.5 cycle 40% UT (60% dip in UT) for 5 cycles	<5% UT (>95% dip in UT) for 0.5 cycle 40% UT (60% dip in UT) for 5 cycles	Mains power quality should be that of a typical commercial or hospital environment.
Power frequency (50/60 Hz) magnetic field	3 A/m	3 A/m	Power frequency magnetic fields should be at levels characteristic of a typical location in a typical commercial or hospital environment.

NOTE: *UT is the AC Mains voltage prior to application of the test level.*

Guidance and Manufacturer's Declaration: Electromagnetic Immunity

The equipment is intended for use in the electromagnetic environment specified in the table below. The customer or the user of the equipment should ensure that it is used in such an environment.

Emissions Test	IEC 60601 Test Level	Compliance Level	Electromagnetic Environment: Guidance
Conducted RF IEC 61000-4-6	3 Vrms 150 kHz to 80 MHz	3 Vrms 150 kHz to 80 MHz	Portable and mobile RF communications equipment should be used no closer to any part of the equipment, including cables, than the recommended separation distance calculated from the equation applicable to the frequency of the transmitter. **Recommended separation distance** $d = \left[\frac{3.5}{3Vrms}\right]\sqrt{P}$ $d = \left[\frac{3.5}{3V/m}\right]\sqrt{P}$ 80 MHz to 800 MHz $d = \left[\frac{7}{3V/m}\right]\sqrt{P}$ 800 MHz to 2.5 GHz Where *P* is the maximum output power rating of the transmitter in watts (W) according to the transmitter manufacturer and *d* is the recommended separation distance in meters (m). Field strengths from fixed RF transmitters, as determined by an electromagnetic site survey[a], should be less than the compliance level in each frequency range[b]. Interference may occur in the vicinity of equipment marked with the following symbol:
Radiated RF IEC 61000-4-3	3 V/m 80 MHz to 2.5 GHz	3 V/m 80 MHz to 2.5 GHz	

a. Field strengths from fixed transmitters, such as base stations for radio (cellular/cordless) telephones and land mobile radios, amateur radios, AM and FM radio broadcast, and TV broadcast cannot be predicted theoretically with accuracy. To assess the electromagnetic environment due to fixed RF transmitters, an electromagnetic site survey should be considered. If the measured field strength in the location in which the equipment is used exceeds the applicable RF compliance level above, the equipment should be observed to verify normal operation. If abnormal performance is observed, additional measures may be necessary, such as reorienting or relocating the equipment.

b. Over the frequency range 150 kHz to 80 MHz, field strengths should be less than [3] V/m.

Recommended Separation Distances Between Portable and Mobile RF Communications Equipment and the Equipment

The equipment is intended for use in the electromagnetic environment in which radiated RF disturbances are controlled. The customer or the user of the equipment can help to prevent electromagnetic interference by maintaining a minimum distance between portable and mobile RF communications equipment (transmitters) and the equipment as recommended in the table below, according to the maximum output power of the communications equipment.

Rated Maximum Output Power of Transmitter W	Separation Distance According to Frequency of Transmitter (m)	
	150 KHz to 800 MHz	800 MHz to 2.5 GHz
	$d = 1.2\sqrt{P}$	$d = 2.3\sqrt{P}$
0.01	0.1 m	0.2 m
0.1	0.4 m	0.7 m
1	1.2 m	2.3 m
10	4.0 m	7.0 m
100	12.0 m	23.0 m

For transmitters rated at a maximum output power not listed above, the recommended separation distance *d* in meters (m) can be estimated using the equation applicable to the frequency of the transmitter, where *P* is the maximum output power rating of the transmitter in watts (W) according to the transmitter manufacturer.

NOTE 1: *At 800 MHz, the separation distance for the higher frequency range applies.*

NOTE 2: *These guidelines may not apply in all situations. Electromagnetic propagation is affected by the absorption and reflection from structures, objects, and people.*

Regulatory Radio Compliance

Federal Communications Commission (FCC)

This device complies with part 15 of the FCC Rules. Operation is subject to the following two conditions:

- This device may not cause harmful interference.
- This device must accept any interference received, including interference that may cause undesired operation.

This equipment has been tested and found to comply with the limits for a Class B digital device, pursuant to Part 15 of FCC Rules. These limits are designed to provide reasonable protection against harmful interference in a residential installation. This equipment generates, uses, and can radiate radio frequency energy. If not installed and used in accordance with the instructions, it may cause harmful interference to radio communications. However, there is no guarantee that interference will not occur in a particular installation. If this equipment does cause harmful interference to radio or television reception, which can be determined by turning the equipment off and on, the user is encouraged to try and correct the interference by one or more of the following measures:

- Reorient or relocate the receiving antenna
- Increase the distance between the equipment and the receiver
- Connect the equipment to an outlet on a circuit different from that to which the receiver is connected
- Consult the dealer or an experienced radio/TV technician for help

The user may find the following booklet prepared by the Federal Communications Commission helpful: The Interference Handbook This booklet is available from the U.S. Government Printing Office, Washington, D.C. 20402. Stock No. 004-000-0034504. Welch Allyn is not responsible for any radio or television interference caused by unauthorized modification of the devices included with this Welch Allyn product, or the substitution or attachment of connecting cables and equipment other than specified by Welch Allyn. The correction of interference caused by such unauthorized modification, substitution, or attachment will be the responsibility of the user.

WLAN
B&B electronics[1] : Radio Module 9373 with part number WLNN-AN-MR551 FCC ID: F4AWLNN551 [1]Manufacturer also called B+B SmartWorx

Industry Canada (IC) Emissions

RF Radiation Hazard Warning

Using higher gain antennas and types of antennas not certified for use with this product is not allowed. The device shall not be co-located with another transmitter.

Cet avertissement de sécurité est conforme aux limites d'exposition définies par la norme CNR-102 at relative aux fréquences radio.

This device complies with RSS 210 of Industry Canada.

Operation is subject to the following two conditions: (1) this device may not cause interference, and (2) this device must accept any interference, including interference that may cause undesired operation of this device.

L'utilisation de ce dispositif est autorisée seulement aux conditions suivantes: (1) il ne doit pas produire de brouillage et (2) l' utilisateur du dispositif doit étre prêt à accepter tout brouillage radioélectrique reçu, même si ce brouillage est susceptible de compromettre le fonctionnement du dispositif.

This Class B digital apparatus complies with Canadian ICES-003.

Cet appareil numérique de la classe B est conform à la norme NMB-003 du Canada.

WLAN
B&B electronics[1] : Radio Module 9373 with part number WLNN-AN-MR551 FCC ID: F4AWLNN551 [1]Manufacturer also called B+B SmartWorx

Declaración de conformidad Mexico

La operación de este equipo está sujeta a las siguientes dos condiciones:

1. es posible que este equipo o dispositivo no cause interferencia perjudicial y
2. este equipo o dispositivo debe aceptar cualquier interferencia, incluyendo la que pueda causar su operación no deseada.

European Union

Czech	Welch Allyn tímto prohlašuje, ze tento WLAN device je ve shodě se základními požadavky a dalšími příslušnými ustanoveními směrnice 2014/53/ES.
Danish	Undertegnede Welch Allyn erklærer herved, at følgende udstyr WLAN device overholder de væsentlige krav og øvrige relevante krav i direktiv 2014/53/EF
Dutch	Bij deze verklaart Welch Allyn dat deze WLAN device voldoet aan de essentiële eisen en aan de overige relevante bepalingen van Richtlijn 2014/53/EC.
English	Hereby, Welch Allyn, declares that this WLAN device is in compliance with the essential requirements and other relevant provisions of Directive 2014/53/EC.
Estonian	Käesolevaga kinnitab Welch Allyn seadme WLAN device vastavust direktiivi 2014/53/EÜ põhinõuetele ja nimetatud direktiivist tulenevatele teistele asjakohastele sätetele.
Finnish	Welch Allyn vakuuttaa täten että WLAN device tyyppinen laite on direktiivin 2014/53/EY oleellisten vaatimusten ja sitä koskevien direktiivin muiden ehtojen mukainen.
French	Par la présente, Welch Allyn déclare que ce WLAN device est conforme aux exigences essentielles et aux autres dispositions de la directive 2014/53/CE qui lui sont applicables
German	Hiermit erklärt Welch Allyn die Übereinstimmung des Gerätes WLAN device mit den grundlegenden Anforderungen und den anderen relevanten Festlegungen der Richtlinie 2014/53/EG. (Wien)
Greek	ΜΕ ΤΗΝ ΠΑΡΟΥΣΑ Welch Allyn ΔΗΛΩΝΕΙ ΟΤΙ WLAN device ΣΥΜΜΟΡΦΩΝΕΤΑΙ ΠΡΟΣ ΤΙΣ ΟΥΣΙΩΔΕΙΣ ΑΠΑΙΤΗΣΕΙΣ ΚΑΙ ΤΙΣ ΛΟΙΠΕΣ ΣΧΕΤΙΚΕΣ ΔΙΑΤΑΞΕΙΣ ΤΗΣ ΟΔΗΓΙΑΣ 2014/53/ΕΚ
Hungarian	Alulírott, Welch Allyn nyilatkozom, hogy a WLAN device megfelel a vonatkozó alapvetõ követelményeknek és az 2014/53/EC irányelv egyéb elõírásainak.
Italian	Con la presente Welch Allyn dichiara che questo WLAN device è conforme ai requisiti essenziali ed alle altre disposizioni pertinenti stabilite dalla direttiva 2014/53/CE.
Latvian	Ar šo Welch Allyn deklarē, ka WLAN device atbilst Direktīvas 2014/53/EK būtiskajām prasībām un citiem ar to saistītajiem noteikumiem.
Lithuanian	Šiuo Welch Allyn deklaruoja, kad šis WLAN device atitinka esminius reikalavimus ir kitas 2014/53/EB Direktyvos nuostatas.
Malti	Hawnhekk, Welch Allyn, jiddikjara li dan WLAN device jikkonforma mal-htigijiet essenzjali u ma provvedimenti ohrajn relevanti li hemm fid-Dirrettiva 2014/53/EC
Portuguese	Welch Allyn declara que este WLAN device está conforme com os requisitos essenciais e outras disposições da Directiva 2014/53/CE.
Slovak	Welch Allyn týmto vyhlasuje, ze WLAN device spĺňa základné požiadavky a všetky príslušné ustanovenia Smernice 2014/53/ES.
Slovene	Šiuo Welch Allyn deklaruoja, kad šis WLAN device atitinka esminius reikalavimus ir kitas 2014/53/EB Direktyvos nuostatas.
Spanish	Por medio de la presente Welch Allyn declara que el WLAN device cumple con los requisitos esenciales y cualesquiera otras disposiciones aplicables o exigibles de la Directiva 2014/53/CE
Swedish	Härmed intygar Welch Allyn att denna WLAN device står I överensstämmelse med de väsentliga egenskapskrav och övriga relevanta bestämmelser som framgår av direktiv 2014/53/EG.

Radio Compliance Table

Argentina	Ente Nacional de las Comunicaciones (ENACOM)	CNC COMISIÓN NACIONAL DE COMUNICACIONES C-22663 (B&B)	
Australia	Australian Communications and Media Authority (ACMA) Radio Compliance Mark (RCM).		
Brazil	Agência Nacional de Telecomunicações (ANATEL)	ANATEL Modelo: B&B 02432-19-10488	Este produto contém a placa 9373 código de homologação ANATEL B&B: 02432-19-10488. Este equipamento não tem direito à proteção contra interferência prejudicial e não pode causar interferência em sistemas devidamente autorizados
EAC		EAC	Products meet all requirements of the corresponding technical regulations and have passed all conformity assessment procedures.
Indonesia		Keterangan a. [61733/I/SDPPI/2019] (B&B) adalah nomor sertifikat yang diterbitkan untuk setiap alat dan perangkat telekomunikasi b. [8620] (B&B) adalah nomor PLG ID (identitas pelanggan) berdasarkan database Lembaga Sertifikasi	Identification a. [61733/I/SDPPI/2019] (B&B) is a number of certificate issued for certified telecommunication equipment b. [8620] (B&B) is a number of PLG ID based on one Certification Body database
Mexico	Instituto Federal de Telecomunicaciones (Federal Telecommunications Institute—IFETEL)	This product contains and Approved module, Model No. 9373, IFETEL No. RCPBB9319-0533 (**B&B**)	
Morocco		AUTHORIZED BY MOROCCO ANRT ***B&B**: Approval number:* MR 17490 ANRT 2018 *Date of approval*: 13-SEP-2018	
Oman	Telecommunications Regulatory Authority	B&B R/6162/18 D172249	
Paraguay	Comisión Nacional de Telecomunicaciones	CONATEL NR: 125/2019	

Pakistan	Pakistan Telecom Authority		
Philippines	National Telecommunications Commission		**B&B**: ESD - 1818097C
Singapore	Info-Communications Media Development Authority (IMDA)	Complies with IMDA Standards [DA105282]	
South Korea	Korea Communications Commission (대한민 국 방송통 신위원 회) – KCC Certification number: **B&B**: R-C-BVT-9373	This equipment is Industrial (Class A) electromagnetic wave suitability equipment and seller or user should take notice of it, and this equipment is to be used in the places except for home. 이기기는업무용(A급) 전자파적합기기로서 판매자 또는 사용자는 이 점을 주의하시기 바라 며, 가정외의지역에서사용하는 것을 목적으로합니다. Class A Equipment (Industrial Broadcasting & Communication Equipment) A급기기(업무용방 송통신기자재)	
UAE		**B&B** ER65768/18	

INTRODUCTION

Manual Purpose

This manual is intended to provide the user with information about:

- Using and understanding the ELI™ 150c or ELI 250c electrocardiograph, the function and feature keys, and the display screen.
- Preparing the device for use. (Section 2)
- Acquiring, printing, and storing an ECG. (Section 3)
- System settings. (Section 4)
- Connectivity and transmitting ECGs. (Appendix A)
- Maintenance and troubleshooting. (Appendix B)

NOTE: This manual may contain screen shots. Any screen shots are provided for reference only. Consult the actual screen in the host language for specific wording.

Audience

This manual is written for clinical professionals. They are expected to have working knowledge of medical procedures and terminology as required for monitoring cardiac patients.

Indications for Use

- Device is indicated for use to acquire, analyze, display, and print electrocardiograms.
- Device is indicated for use to provide interpretation of the data for consideration by a physician.
- Device is indicated for use in a clinical setting, by a physician or by trained personnel who are acting on the orders of a licensed physician. It is not intended as a sole means of diagnosis.
- The interpretations of ECG offered by the device are only significant when used in conjunction with a physician over-read as well as consideration of all other relevant patient data.
- Device is indicated for use on adult and pediatric populations.
- The device is not intended to be used as a vital signs physiological monitor.

System Description

The device is a 12-lead diagnostic electrocardiograph used for acquiring, viewing, and printing adult and pediatric 12-lead ECG data. The device is optionally equipped with Welch Allyn's VERITAS™ resting ECG interpretation algorithm with age and gender specific criteria. If this option is enabled (see Section 4) the VERITAS algorithm can provide an over-reading physician with a silent second opinion through diagnostic statements output on the ECG report. For additional information on the VERITAS algorithm, please refer to the *Physician's Guide Adult and Pediatric user manual*. (See Accessories.)

The device can be configured with expanded memory, bidirectional connectivity, and DICOM® protocol support, and operates on battery or line power.

Supported print formats for the ELI 150c include: standard or Cabrera 3, 3+1, 3+3, or 6 channel in automatic mode; 3 or 6 channel rhythm strip printing.

Supported print formats for the ELI 250c include: standard or Cabrera 3+1, 3+3, 6, 6+6, or 12 channel in automatic mode; 3, 6, or 12 channel rhythm strip printing.

With either model, during rhythm strip printing the user can toggle between the various channels (default leads, limb and chest leads, etc.) to print by selecting **F2 (Leads)**. To suspend a rhythm strip print, press **F6 (Stby)**; press **F6 (Cont)** to resume. Press **STOP** at any time to end rhythm strip printing.

The device includes:

- Acquisition module with lead wire set
- Hospital-grade power cord
- Antenna (with WLAN or GPRS mobile)
- 1 pack paper
- 1 package of electrodes
- Physicians Guide Adult & Pediatric (with interpretation feature)
- User manual CD
- Accessory starter kit

System Illustrations*

*ELI 250c shown

Figure 1-1

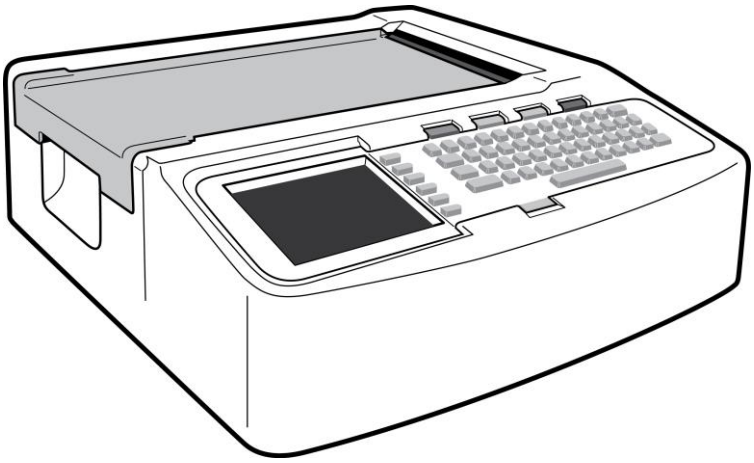

Figure 1-2, Left Side

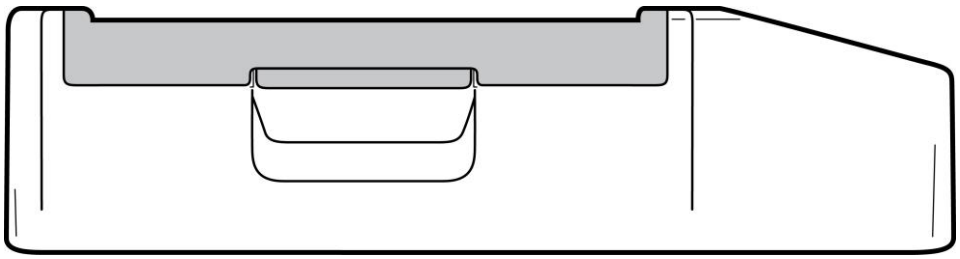

Figure 1-3, Rear

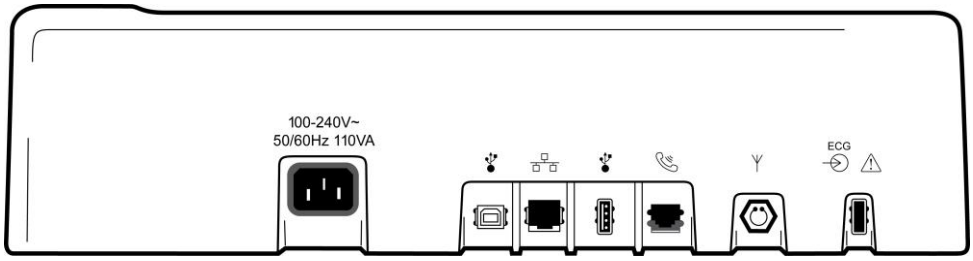

Figure 1-4, Base

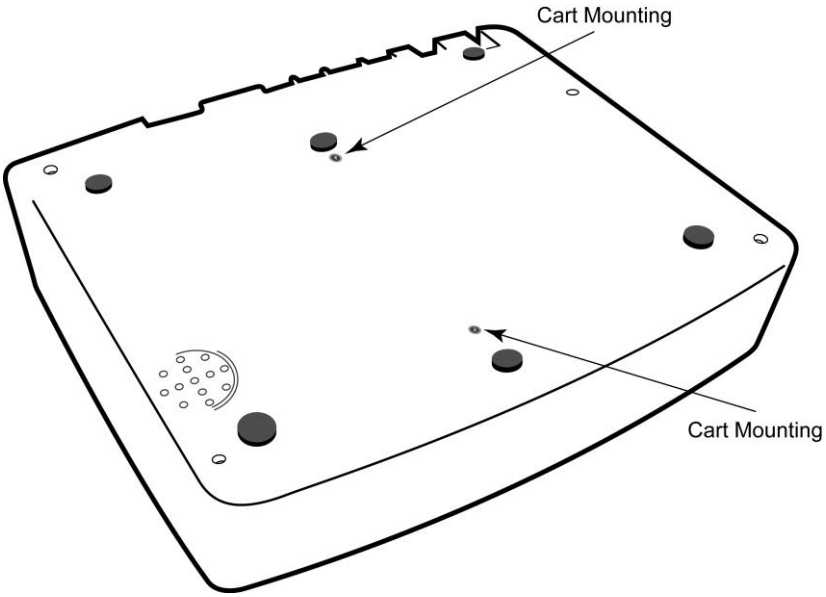

Display and Keyboard*

*ELI 250c shown

Figure 1-5

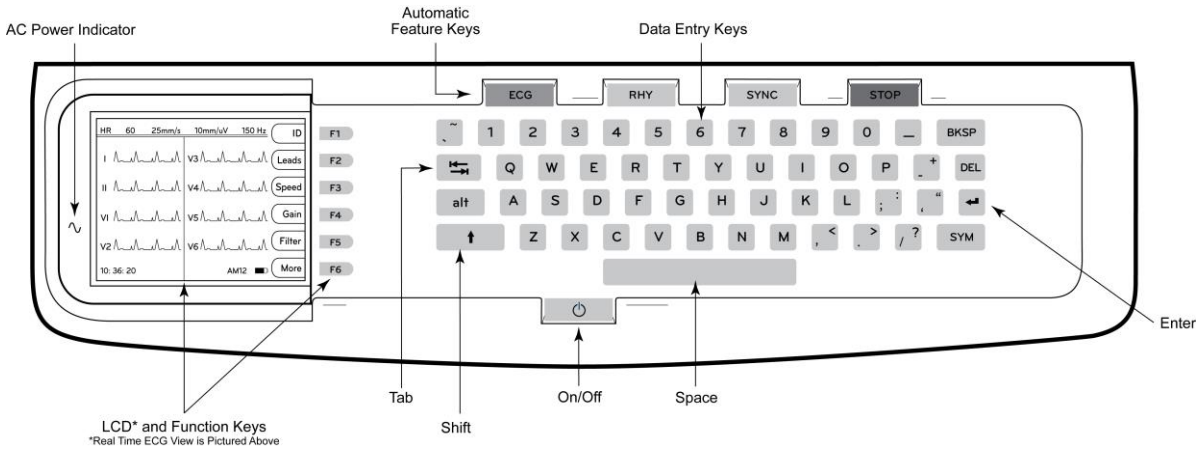

Automatic Feature Keys

Automatic feature keys are used as a one-touch operation for:

ECG	ECG Acquisition
RHY	Rhythm Printing
SYNC	Transmit and/or Download Order List; Time Sync
STOP	Stop

Display Overview

The device features a ¼ VGA 320 x 240 pixels LCD color display for valuable preview of ECG waveform, function key labels, and other parameters as explained below. During ECG acquisition, notification messages will also appear on the display. (See Section 3, *ECG Acquisition, Printing, Storage.)*

Figure 1-6

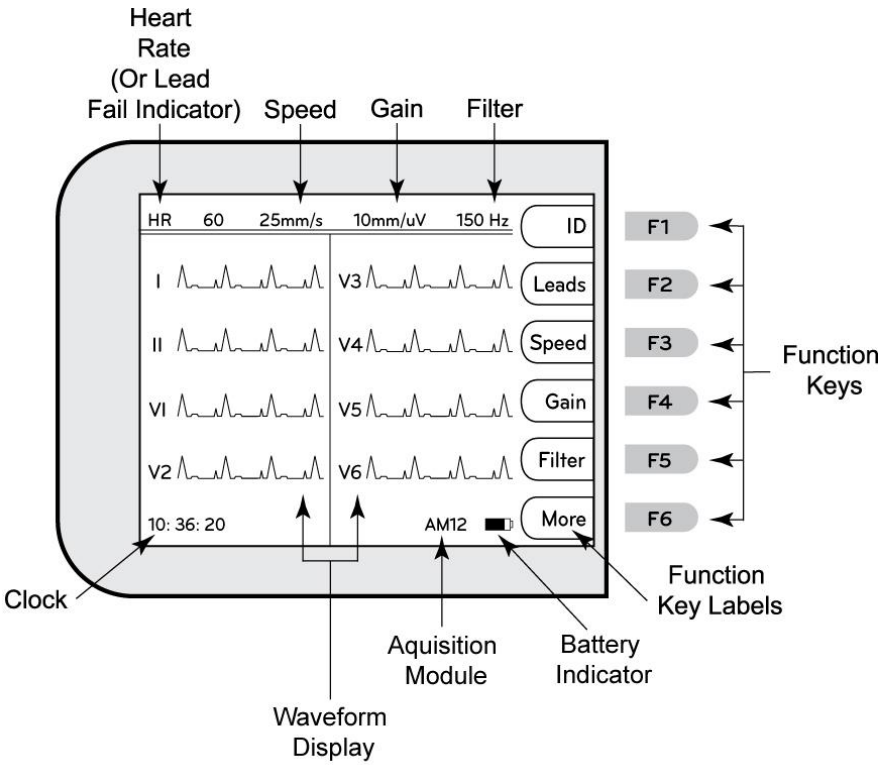

Heart Rate (HR):

When a patient is connected to the electrocardiograph, his/her HR is displayed in real time. The HR is the average ventricular rate measured over an average of the patient's last five beats.

Speed:

Use **F3 (Speed)** to select display speed or rhythm printout speed: 5 mm/s, 10 mm/s, 25 mm/s, or 50mm/s. Paper speed is printed at the bottom right corner of the ECG printout.

Gain:

Use **F4 (Gain)** to select waveform amplitude for display and printout: 5 mm/mV, 10 mm/mV, or 20 mm/mV. Gain is printed at the bottom right corner of the ECG printout.

Filter:

Use **F5 (Filt)** to select the low-pass filter options: 40 Hz, 150 Hz, or 300 Hz for ECG printouts. Filter is printed at the bottom right corner of the ECG printout.

WARNING: *When the 40 Hz filter is used, the frequency response requirement for diagnostic ECG equipment cannot be met. The 40 Hz filter significantly reduces high-frequency components of the ECG and pacemaker spike amplitudes, and is recommended only if high-frequency noise cannot be reduced by proper procedures.*

Function Keys:

Function keys activate the LCD label adjacent to each function key. LCD labels/functions change depending upon the screen displayed. If the label is blank, the function key is not active.

Battery Indicator:

Indicates available battery power. (See Section 2, *Applying Power*.)

Acquisition Module:

Displays type of acquisition module being used.

Clock:

Time display with hour, minutes, and seconds resolution. (See Section 2 for setting a new time and date.) When the ECG is acquired, the time displayed is the printed ECG acquisition time.

ELI 150c Specifications

Feature	Specifications
Instrument Type	12-lead electrocardiograph
Input Channels	Simultaneous acquisition of all 12 leads
Standard Leads Acquired	I, II, III, aVR, aVL, aVF, V1, V2, V3, V4, V5, V6
Waveform Display	Backlit, ¼ VGA color LCD (320 x 240); 3, 4+4, or 6+6 lead presentation
Input Impedance Input Dynamic Range Electrode Offset Tolerance Common Mode Rejection Pacemaker Pulse Display	Meets or exceeds requirements of ANSI/AAMI/IEC 60601-2-25
Patient Leakage Current Chassis Leakage Current	Meets or exceeds requirements of ANSI/AAMI ES1
Digital Sampling Rate	40,000 s/sec/channel used for pacemaker spike detection; 1000 s/sec/channel used for recording and analysis
Optional Functions	Welch Allyn VERITAS resting ECG interpretation algorithm with age and gender specific criteria; connectivity with bidirectional communication
Paper	Perforated double Z-fold thermal paper; 108 mm (4”) wide, 200 sheets
Thermal Printer	Computer-controlled dot array; 8 dots/mm
Thermal Printer Speeds	5, 10, 25, or 50 mm/s
Gain Settings	5, 10, or 20 mm/mV
Report Print Formats	Standard or Cabrera; 3, 3+1, 3+3, or 6 channel
Rhythm Print Formats	3 or 6 channel with configurable lead groups
Keyboard	Elastomer keyboard with complete alphanumeric keys, soft-key menu, and dedicated function keys
Frequency Response	0.05 to 300 Hz
Filters	High-performance baseline filter; AC interference filter 50/60 Hz; low-pass filters 40 Hz, 150 Hz, or 300 Hz
A/D Conversion	20 bits (1.17 microvolt LSB)
Device Classification	Class I, Type CF defibrillation-proof applied parts
ECG Storage	Internal storage up to 40 ECGs; optional expanded up to 200 ECGs
Weight	7.2 lbs. (3.3 kg) including battery (without paper)
Dimensions	11.25 x 11.5 x 3.75” (29.2 x 30.5 x 10.2 cm)
Power Requirements	Universal AC power supply (100-240 VAC at 50/60 Hz) 110 VA; internal rechargeable battery

ELI 250c Specifications

Feature	Specifications
Instrument Type	12-lead electrocardiograph
Input Channels	Simultaneous acquisition of all 12 leads
Standard Leads Acquired	I, II, III, aVR, aVL, aVF, V1, V2, V3, V4, V5, V6
Waveform Display	Backlit, ¼ VGA color LCD (320 x 240); 3, 4+4, or 6+6 lead presentation
Input Impedance Input Dynamic Range Electrode Offset Tolerance Common Mode Rejection Pacemaker Pulse Display	Meets or exceeds requirements of ANSI/AAMI/IEC 60601-2-25
Patient Leakage Current Chassis Leakage Current	Meets or exceeds requirements of ANSI/AAMI ES1
Digital Sampling Rate	40,000 s/sec/channel used for pacemaker spike detection; 1000 s/sec/channel used for recording and analysis
Optional Functions	Welch Allyn VERITAS resting ECG interpretation algorithm with age and gender specific criteria; connectivity with bidirectional communication
Paper	Perforated Z-fold thermal paper; A4 or 8.5 x 11” wide, 250 sheets
Thermal Printer	Computer-controlled dot array; 8 dots/mm
Thermal Printer Speeds	5, 10, 25, or 50 mm/s
Gain Settings	5, 10, or 20 mm/mV
Report Print Formats	Standard or Cabrera; 3+1, 3+3, 6, 6+6, or 12 channel
Rhythm Print Formats	3, 6, or 12 channel with configurable lead groups
Keyboard	Elastomer keyboard with complete alphanumeric keys, soft-key menu, and dedicated function keys
Frequency Response	0.05 to 300 Hz
Filters	High-performance baseline filter; AC interference filter 50/60 Hz; low-pass filters 40 Hz, 150 Hz, or 300 Hz
A/D Conversion	20 bits (1.17 microvolt LSB)
Device Classification	Class I, Type CF defibrillation-proof applied parts
ECG Storage	Internal storage up to 40 ECGs; optional expanded up to 200 ECGs
Weight	11.25 lbs. (5.1 kg) including battery (without paper)
Dimensions	15.5 x 17 x 4” (39.4 x 43.2 x 10.2 cm)
Power Requirements	Universal AC power supply (100-240 VAC at 50/60 Hz) 110 VA; internal rechargeable battery

Accessories

Replacement Lead sets and Accessories

Part Number	Description
9293-046-07	COMBINER WAM LEADS 10 POS IEC & AHA GRAY
9293-046-60	LEAD SET WAM 10 WIRE BANANA AHA GRAY
9293-046-61	LEAD SET WAM 10 WIRE BANANA IEC GRAY
9293-046-62	RPLCE LD SET WAM/AM12 LIMBS BANA AHA GRY
9293-046-63	RPLCE LD SET WAM/AM12 LIMBS BANA IEC GRY
9293-046-64	RPLCE LD SET WAM/AM12 V1-V3 BANA AHA GRY
9293-046-65	RPLCE LD SET WAM/AM12 C1-C3 BANA IEC GRY
9293-046-66	RPLCE LD SET WAM/AM12 V4-V6 BANA AHA GRY
9293-046-67	RPLCE LD SET WAM/AM12 C4-C6 BANA IEC GRY
9293-047-60	LEAD SET WAM 10 WIRE CLIPS AHA GRAY
9293-047-61	LEAD SET WAM 10 WIRE CLIPS IEC GRAY
9293-047-62	RPLCE LD SET WAM/AM12 LIMBS CLIP AHA GRY
9293-047-63	RPLCE LD SET WAM/AM12 LIMBS CLIP IEC GRY
9293-047-64	RPLCE LD SET WAM/AM12 V1-V3 CLIP AHA GRY
9293-047-65	RPLCE LD SET WAM/AM12 C1-C3 CLIP IEC GRY
9293-047-66	RPLCE LD SET WAM/AM12 V4-V6 CLIP AHA GRY
9293-047-67	RPLCE LD SET WAM/AM12 C4-C6 CLIP IEC GRY

Paper

Part Number	Description
9100-028-50	PAPER ELI 150 US CASE/24/200 ZFOLD
9100-026-50	PAPER ELI 250 US CASE/12/250 ZFOLD
9100-026-51	PAPER ELI 250 A4 CASE/12/250 ZFOLD

Electrodes

Part Number	Description
108070	ECG MONITORING ELECTRODES CASE 300
108071	ELECTRODE RESTING TAB CASE/5000

Acquisition Modules

Part Number	Description
9293-048-54	WIRED PATIENT CABLE (AM12)
30012-019-56	WIRELESS ACQUISITION MODULE (WAM)

Power Cords

Part Number	Description
3181-008	POWER CORD US/CAN HOSPITAL 5-15P+320-C13
3181-012-01	POWER CORD AUSTRALIA AS3112+IEC320-C13
3181-015-01	POWER CORD UK BS1363+IEC320-C13
3181-002	POWER CORD INTN'L CEE7/7+IEC320-C13
3181-017-01	POWER CORD CHINESE

Manuals

Part Number	Description
9515-001-50-CD	PHYSICIAN'S GUIDE ADULT & PEDIATRIC UM
9515-166-50-CD	ELI LINK USER MANUALS
9515-177-50-CD	ELI 150c/ELI 250c USER MANUALS
9516-177-50-ENG	ELI 150c/ELI 250c SERVICE MANUAL

Contact your dealer or go to **www.Welchallyn .com** for more information.

EQUIPMENT PREPARATION

Initial Startup

With its initial use, the device requires the user to set certain configurations prior to obtaining any ECGs. The device will automatically display a language configuration page followed by AC filter frequency, height/weight units, a set time/date configuration page (including daylight savings time selection), and a configuration page to pair the WAM™ (wireless acquisition module) if it will be used. (Refer to the WAM user manual for detailed pairing instructions to the device.)

Connecting the Acquisition Module

Connect the AM12™ to the ECG connector at the rear of the device. When using the optional WAM for ECG acquisition, the connector is not required.

Figure 2-1*

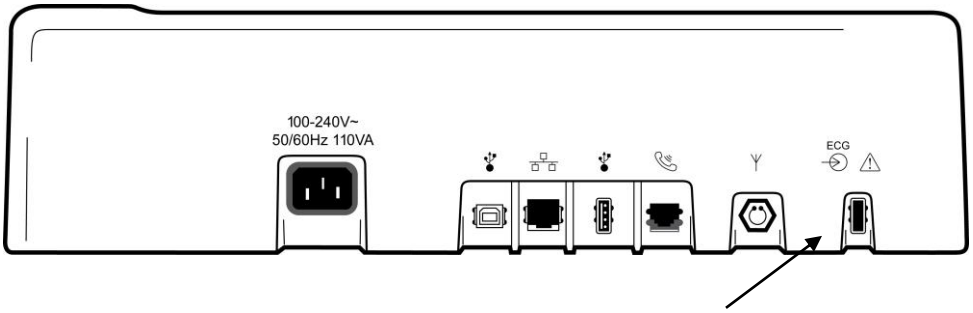

Connect AM12 to the ECG connector

**ELI 250c shown.*

***NOTE**: The device must be configured at the factory for use with the WAM. Select* **F6 (More)** *followed by* **F6 (More)** *to determine the device's setting. "WAM Option Not Available" will display if the device is not configured to work with the WAM.*

***NOTE**: WAM must be paired to electrocardiograph before operation.*

Loading Paper

Figure 2-2

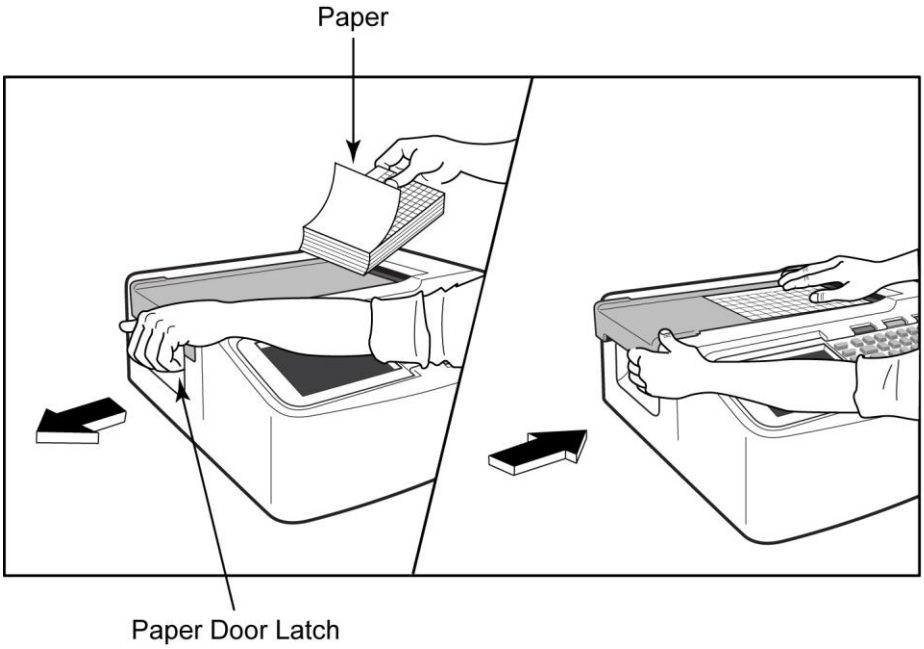

1. Remove all packaging including cardboard backing from the paper stack.

2. Facing the front of the device, use the release latch on the left side and slide the paper tray cover to the left.

3. Place the stack of thermal paper into the paper tray such that the grid side of the paper is up when it is pulled over the paper tray cover. The paper cue mark (a small black rectangle) should be in the lower left corner.

4. Manually advance one page of paper beyond the closure point of the writer. Make sure the paper lays on the black roller evenly within the channel of the paper door. If paper is not manually advanced evenly, risk of jamming or queue faults increases.

5. Slide paper tray cover to the right until the cover latches in a locked position. You will hear a sharp click when the door is properly latched.

WARNING: *Risk of injury to fingers in writer paper door or platen drive mechanisms.*

NOTE*: For proper printing performance, be certain to use Welch Allyn recommended thermal paper.*

A4 Paper Users

To use A4 paper, please insert the paper tray spacer:

Figure 2-3

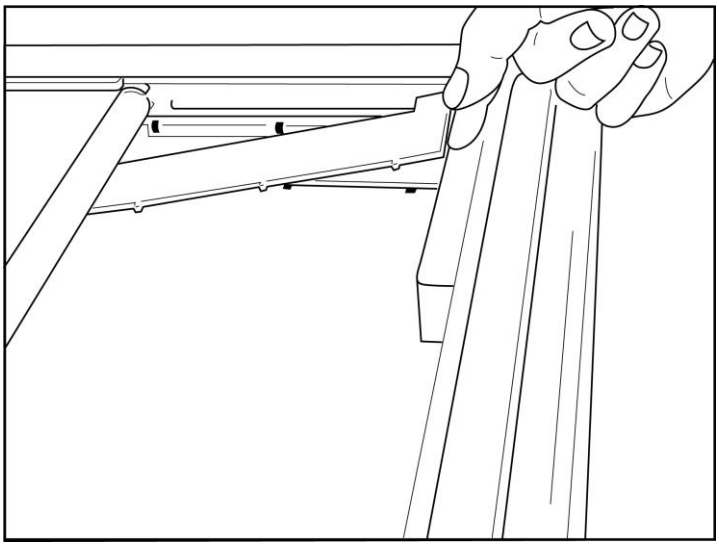

1. Slide paper tray spacer towards rear wall of writer tray. Align the bottom four plastic arms with the four openings in the base of the writer tray. Similarly, align the top 3 plastic arms with the three openings on the rear wall of the writer tray.

Figure 2-4

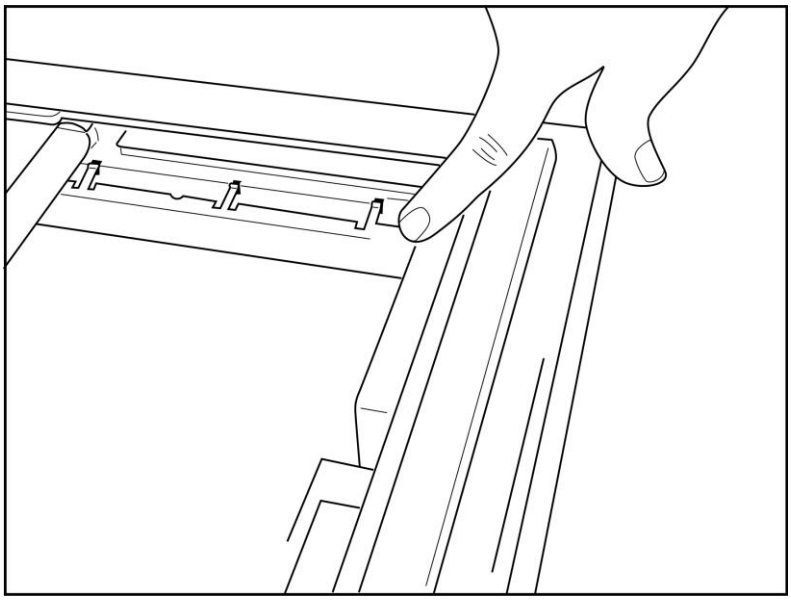

2. The paper tray spacer should be parallel with the rear wall of the writer tray.

Figure 2-5

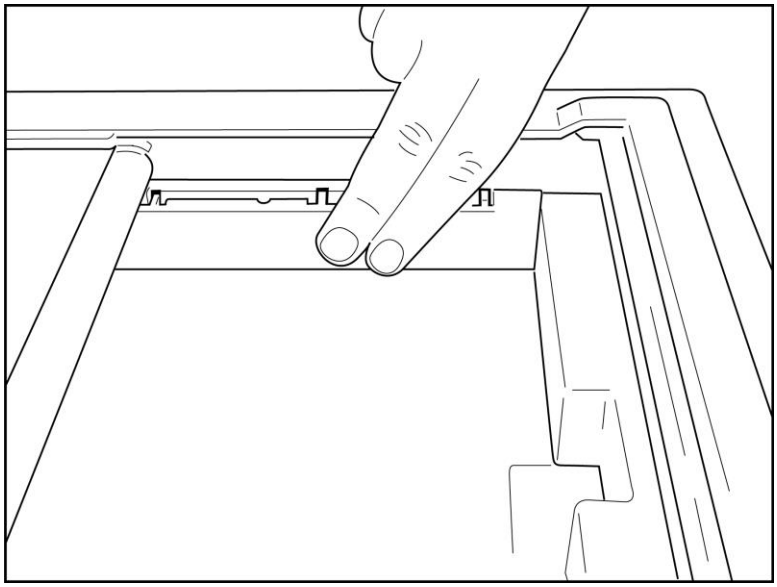

3. Gently press paper tray spacer in place.
4. Set configuration option to use A4 paper. (See Section 4.)
5. Gently press on the top three plastic arms to remove the paper tray spacer.

Applying Power

1. Plug the power cord into an AC wall outlet and into the back of the device. (Reference Figure 1-3.)

2. Press the power ON/OFF button located on the face panel of the device. (Reference Figure 1-5.)

When using AC power, the battery indicator is clear when charging and illuminates in white when fully charged. When using battery power, the battery indicator illuminates in green with a 35% to 100% charge and in yellow with a 20% to 35% charge. The battery indicator will turn to red when the battery charge is 20% or less.

The device should be connected to AC power for recharging when not in use.

TIP: *Battery voltage is displayed at the bottom of the Time/Date screen.*

NOTE: *There are configurable features on the device that can be used to help prolong battery life (see Section 4). Proper battery care and maintenance will also help prolong battery life.*

CAUTION: *The device can be operated on AC line voltage in the absence of a battery or in the event of an otherwise fully depleted battery. When line voltage is removed the system immediately and automatically continues on battery power. When the battery voltage is below 10.5V the device will automatically power down. Once the battery voltage rises above 10.5V the device may be operated on battery power. It may require up to 30 hours on AC line voltage to recharge the battery from its lowest level. Routinely discharging a battery to the lowest level will severely shorten the life of the battery.*

NOTE: *When the On/Off button is depressed for longer than approximately 10 seconds, the electrocardiograph will do a "hard reboot" and reset the internal clock to default date and time (1-1-2010) and advise the user to "Set date/time." When turned on, the user will need to re-enter the date and time. This requirement may be bypassed if desired and an ECG can be acquired by selecting* **F6 (Exit)** *or* **F5 (Save)***, but this ECG will have the date of 1-1-2010. With the next patient the electrocardiograph will request the operator to enter the proper time and date again.*

Low Battery Conditions

To prevent permanent damage to the internal lead-acid battery, the device will automatically power down when the battery has been depleted to its lowest allowable level. When the device detects that the battery voltage has been depleted to this level, it will display the messages "*Battery Low – Charge Unit*" for 10 seconds before shutting down. Plugging in the AC cord during this time will cause the unit to return to the main acquisition screen.

If the device is in the ECG acquisition mode when the battery voltage is detected at its lowest allowable level, the unit will display the message "*Battery Low – Charge Unit*", but will **not** automatically shut down until the user exits the ECG acquisition mode. This allows the user to complete an ECG already in progress.

Setting Time and Date

1. From real-time ECG view, select **F6 (More)** followed by **F5 (Set Time/Date)**.
2. Use **Enter**, **Tab, F1 (▲),** or **F2 (▼)** to move through each row. Use the keyboard to type in desired values for the date and time (using a 24-hour clock).

   ***NOTE**: To set time immediately via auto synchronization press* **F3 (Sync)**.
3. Use **F3 (►)** to move through the selections for setting Time Zone and Daylight Savings. To use Daylight Savings, select **Yes**. Use **F2 (▼)** to scroll to, or **F4 (Page)** to move to the begin/end settings page. Enter the month, day, and time to begin Daylight Savings and the month, day, and time to end Daylight Savings. Use **F1 (▲), F2 (▼),** or **F4 (Page)** to return to the previous screen. If the time zone selected does not support Daylight Savings, customize a begin and end time by selecting Custom. The Custom setting can also be used to override the current Daylight Savings settings

   ***TIP**: Use the* **BKSP** *key to erase entry errors.*

   ***NOTE**:* **F4 (Page)** *is only applicable to view read only (Yes) or change (Custom) a Daylight Savings setting.* **F4 (Page)** *cannot be accessed from the Time Zone setting field.*
4. Select **F5 (Save)** to save changes before exiting.
5. Select **F6** (**Cancel)** to return to real-time ECG view. If you did not save before selecting Cancel, any changes made to the time or date will be lost.

   ***NOTE**: Date and time may be set to auto synchronization with the cardiology management system if available. (See section 4, Settings.)*

   ***NOTE**: In the event of a hard reboot or the loss of battery power, the device will require the date and time to be re-entered. The device will present a message stating "Set Date/Time." The user then by depressing any key (except alt, shift or power) will enter the date and time entry menu. You may bypass this by selecting* **F6 (Cancel)** *or* **F5 (Save)**.

Using the WAM or AM12 Acquisition Module

ECG acquisition and rhythm strip printing can also be performed at the WAM or the AM12 acquisition modules. To use the WAM, refer to the WAM user manual. To use the AM12, refer to the AM12 short-form instruction card.

***NOTE**: The device must be configured at the factory for use with the WAM. Select* **F6 (More)** *followed by* **F6 (More)** *to determine the device's setting. "WAM Option Not Available" will display if the device is not configured to work with the WAM.*

***NOTE**: WAM must be paired to electrocardiograph before operation.*

Installing the WLAN Antenna

The device with optional WLAN module is shipped with the antenna not installed: the antenna can be found in the accessory box.

1. Remove the antenna from the accessory box.
2. Locate the antenna connector on the back of the device.
3. Mount the antenna on the connector by rotating the antenna clockwise. The antenna must be finger tight to its connector.
4. Locate the built-in hinge and fold the antenna (it will now be at a 90° angle); continue to rotate the antenna clockwise until it is placed vertically. This will guarantee the best signal for the WLAN module.

***NOTE:** For more information about the use of the WLAN option, refer to Appendix A.*

RECORD AN ECG

Patient Preparation

Before attaching the electrodes, assure the patient fully understands the procedure and what to expect.

- Privacy is very important in assuring the patient is relaxed.
- Reassure the patient that the procedure is painless and that the electrodes on their skin are all that they will feel.
- Make sure the patient is lying down and is comfortable. If the table is narrow, tuck the patient's hands under his/her buttocks to ensure their muscles are relaxed.
- Once all the electrodes are attached, ask the patient to lie still and to not talk. Explain this will assist you in acquiring a good ECG.

Preparing Patient Skin

Thorough skin preparation is very important. There is natural resistance on the skin surface from various sources such as hair, oil, and dry, dead skin. Skin preparation is intended to minimize these effects and maximize the quality of the ECG signal.

To prepare the skin:

- Shave hair from electrode sites if necessary.
- Wash area with warm, soapy water.
- Dry skin vigorously with a pad such as 2 x 2 or 4 x 4 gauze to remove dead skin cells and oil, and to increase capillary blood flow.

  ***NOTE**: With elderly or frail patients take care to not abrade the skin causing discomfort or bruising. Clinical discretion should always be used in patient preparation.*

Patient Hookup

Correct electrode placement is important for acquiring a successful ECG.

A good minimum-impedance pathway will provide superior noise-free waveforms. Good quality silver-silver chloride (Ag/AgCl) electrodes should be used.

> ***TIP:** Electrodes should be stored in an air-tight container. Electrodes will dry out if not stored properly which will cause loss of adhesion and conductivity.*

To Attach the Electrodes

1. Expose the arms and legs of the patient to attach the limb leads.
2. Place the electrodes on flat, fleshy parts of the arms and legs.
3. If a limb site is not available, place the electrodes on a perfused area of the stump.
4. Attach the electrodes to the skin. A good test for firm electrode contact is to slightly tug on the electrode to check adhesion. If the electrode moves freely, it needs to be changed. If the electrode does not move easily, a good connection has been obtained.

For accurate V-lead placement and monitoring, it is important to locate the 4th intercostal space. The 4th intercostal space is determined by first locating the 1st intercostal space. Because patients vary with respect to body shape, it is difficult to palpate the 1st intercostal space with accuracy. Thus, locate the 2nd intercostal space by first palpating the little bony prominence called the **Angle of Louis**, where the body of the sternum joins the manubrium. This rise in the sternum identifies where the second rib is attached, and the space just below it is the 2nd intercostal space. Palpate and count down the chest until you locate the 4th intercostal space.

Patient Hookup Summary Table

AAMI Lead	IEC Lead	Electrode Position
V1 Red	C1 Red	On the 4th intercostal space at the right sternal border.
V2 Yellow	C2 Yellow	On the 4th intercostal space at the left sternal border.
V3 Green	C3 Green	Midway between V2/C2 and V4/C4 electrodes.
V4 Blue	C4 Brown	On the 5th intercostal space at the left midclavicular line.
V5 Orange	C5 Black	Midway between V4/C4 and V6/C6 electrodes.
V6 Violet	C6 Violet	On the left midaxillary line, horizontal with V4/C4 electrode.
LA Black RA White	L Yellow R Red	On the deltoid, forearm, or wrist.
LL Red RL Green	F Green N Black	On the thigh or ankle.

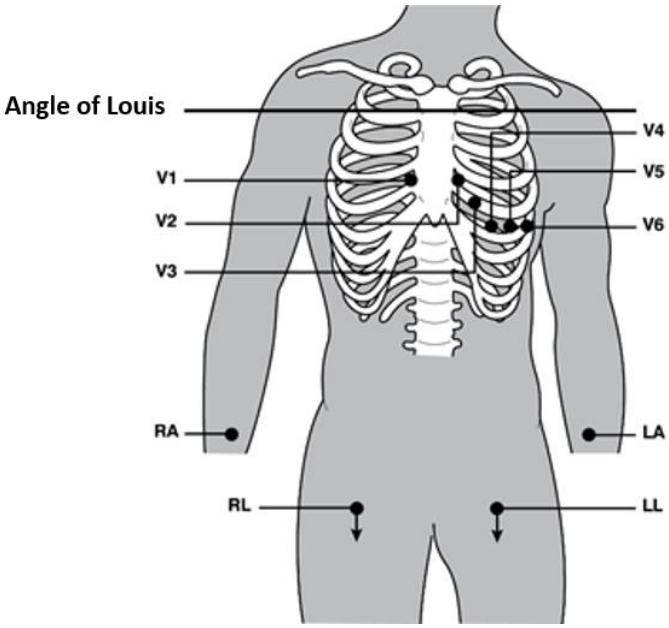

Patient Demographic Entry

Patient demographic information can be entered before acquisition. The entered patient ID fields will remain populated until you acquire the ECG; however, if you disconnect the leads from the patient, turn off the electrocardiograph, or change a configuration setting before acquisition, the patient information will be cleared.

To access the patient demographic data entry menu, press **F1 (ID)** from real-time ECG view. Use the appropriate function key to select the desired study group. The patient demographic labels available are determined by the ID format selected in the configuration settings. In addition to short or long patient ID formats, the device also supports a custom ID format. The custom format, designed in ELI Link or an E-Scribe™ data management system, can be downloaded to the device. Additional information about the custom ID can be found in Appendix A, or in the ELI Link and E-Scribe user manuals.

Patient demographic entry can be completed manually or automatically using an existing patient record in the directory. To manually enter the patient demographics, use **Enter**, **Tab, F1 (▲),** or **F2 (▼)** to move to each data entry field. To enter gender, use **F3 (►)** to move through the options, or type **F** or **M** from the keyboard to change the gender to female or male. The patient's date of birth should be entered whenever possible to ensure interpretation (if set in configuration settings) is as complete as possible.

> ***NOTE****: If no age is entered before acquiring an ECG, the interpretation will default to a 40-year old male. The statement "INTERPRETATION BASED ON A DEFAULT AGE OF 40 YEARS" will be added to the interpretation text.*
>
> ***NOTE****: If an age of zero (0) is used, the interpretation will default to a 6-month old infant. The statement "INTERPRETATION BASED ON A DEFAULT AGE OF 6 MONTHS" will be added to the interpretation text.*
>
> ***NOTE****: Where global measurement values are not available (i.e., rate, interval, axis), text such as '- -'or '*' or similar will display/print for the unavailable value.*
>
> ***NOTE****: Where mandatory fields have been selected (i.e., Name, ID or Tech Initials), the required field will be highlighted in red.*

When done, select **F6 (Done).** Skipped fields will appear as a blank field on the header of the ECG printout.

To automatically populate the demographics using an existing patient record, select **F5 (Dir)** from the ID screen**.** Use **F1 (▼/▲)** to navigate by line down the directory list; use **⬆ (Shift), F1 (▼/▲)** to move up. Similarly, use **F2 (▼▼/▲▲)** to page down the directory list; use **⬆ (Shift), F2 (▼▼/▲▲)** to page up. To quickly select a patient name, use the keyboard to enter the first few letters of the last name. The letters will be displayed in the lower left corner of the display screen and the desired name will automatically be highlighted. Once the desired name is highlighted, press **F3 (Selec)** and the patient ID screen will return with all demographic fields populated. Return to real-time ECG view by selecting **F6 (Done)**.

> ***TIP****: Automatically populating demographic fields via the directory is only possible when the ID formats are the same between records.*
>
> ***NOTE****: A password may be required in order to enter the ECG directory. Obtain the password from the department Administrator.*
>
> ***NOTE****: A red ID label indicates there are no entries in the ID demographics, or a required field is missing from the selected patient demographics.*

Entering Symbols

Punctuation characters, symbols, and/or accented alphanumeric characters (language dependent) can be entered using the **SYM** key on the keyboard. Selecting **SYM** will display 10 special characters at a time. Use **F1 (Prev)** or **F2 (Next)** to move to the previous/next set of special characters.

Each special character will have a numeric character located below it. Using the keyboard, press the desired numeric key to add the corresponding special character. Select **SYM** or **F6 (Done)** to exit the symbol entry mode.

Auto-Fill ID

If Auto-Fill ID is enabled in the configuration, the system will automatically populate the demographic fields in the ID screen. When the patient ID field is manually populated and followed either by selecting **F6 (Done)** or **F2 (▼)**, the system automatically scans the patient directory. If records with the exact patient ID are found, the existing data is used to fill some of the demographic fields. The auto-fill feature is designed to automatically populate last name, first name, date of birth, age, and gender only. If no matching records are found, a brief message is displayed and the user must manually enter the patient's demographics.

> ***NOTE:*** *In order to avoid the use of incorrect data, the auto-fill feature is only possible when the ID formats are the same between records.*

When time is of the essence or if patient demographics are not available, ID information can be added to the ECG after it has been acquired via the patient directory. Acquiring an emergency (STAT) or unidentified ECG is explained in *ECG Acquisition, Printing, Storage*.

ECG Acquisition, Printing, Storage

Acquisition

Once the patient is connected, the device continuously collects and displays ECG data; therefore, before you press **ECG** or **RHY** you should instruct the patient to relax in a supine position to ensure that the ECG is free from artifact (noise) due to patient activity. If workflow permits patient demographic entry prior to acquisition, enter the patient identification information as explained in *Patient Demographics*. After you complete the last data entry field, select **F6 (Done)** to return to the real-time ECG view.

Examine the display for any of the following notification messages:

- **Leads Off** –displays when patient is not connected.
- **Lead Fault** –displays faulty lead(s). Re-prep and replace electrode(s) if necessary to obtain satisfactory waveform(s). (See *Patient Preparation*.)
- **Electrode Wrong Position** – displays one of the following when a lead is connected incorrectly or is in the wrong location. (See *Patient Preparation*.)
    - "Limb leads reversed?"
    - "LA or LL reversed?"
    - "RA or RL reversed?"
    - "RA or LA reversed?"
    - "V1 or V2 reversed?"
    - "V2 or V3 reversed?"
    - "V3 or V4 reversed?"
    - "V4 or V5 reversed?"
    - "V5 or V6 reversed?"

NOTE: The algorithm detecting electrode misplacements is based on normal physiology and ECG lead order, and tries to identify the most likely switch; however, it is advisable to check the other electrode positions in the same group (limb or chest).

- **WAM Low Battery** – displays when a low battery signal for the WAM is detected.
- **Searching for WAM** – displays when the WAM is not detected. Occurs usually when the WAM is out of range or not powered on.

When the problem is corrected, the device waits for 10 seconds of good data before analyzing the ECG. Please refer to the following troubleshooting guide based on Einthoven's Triangle:

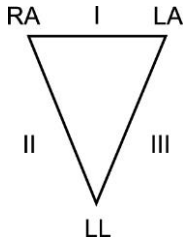

Artifact	Check Electrode
Lead II and III artifact	Poor LL electrode or left leg tremor
Lead I and II artifact	Poor RA electrode or right arm tremor
Lead I and III artifact	Poor LA electrode or left arm tremor
V Leads	Re-prep site & replace electrode

Press the **ECG** key. The real-time ECG view is then replaced with the acquired ECG view. The default real-time ECG view is not available in the acquired ECG view for navigation purposes.

NOTE: *New LCD label functions are available in the acquired ECG view.*

NOTE: *Functions are not available during acquisition.*

NOTE*: Change real-time display leads by selecting* **F2 (Leads)**.

To acquire an emergency (STAT) or unidentified ECG for a new patient, press the **ECG** key two times. "Collecting 10 seconds of data" is displayed on the top of the LCD and "captured, analyzed, formatted" is displayed on the bottom of the LCD. To save the captured ECG, select **F1 (ID)** to enter patient demographics. At the "New Patient?" prompt, select "No". The device will display the last patient record entered. (If "Yes", is selected the ECG will not be saved and the user will return to the real-time ECG view.) Use the existing information, enter new demographics, or search the directory. Once completed, select **F6 (Done)**. Select **F3 (Print)** to print or **F6 (Done)** to exit. Choose to save or delete the ECG at the "Save ECG?" prompt.

Best 10 Seconds Selection

The ELI 150c/250c incorporates a 5 minute memory buffer for collection of ECG data. When the Best 10 feature is enabled, the device will automatically select the best 10 seconds of ECG from within the 5-minute buffer. The best 10 seconds is determined based upon measures of high and low-frequency noise found in the 10-second ECG segments. Should a single limb lead or two precordial lead fail conditions occur, the Best 10 feature is disabled until the limb lead fail or precordial lead fail condition is resolved. At resolution, the Best 10 feature becomes available and the selection buffer continues.

Users can switch between BEST 10 or LAST 10 by selecting **F5 (More)** followed by **F5 (Last)** or **F5 (Best)** depending on the current view.

Printing

If Auto-Print is enabled in the configuration, an ECG is printed following acquisition. To print a manual printout, select **F3 (Print)**.

Toggle through the available waveform display formats (3, 8 or 12 lead) by selecting **F2 (Leads)**. A preview of the full 10-seconds of ECG waveform is available in the acquired ECG view. The first 5 seconds are shown on the initial view screen (page 1/2 is displayed in the upper right corner); the second 5 seconds is viewed by selecting **F2 (Leads)** again (page 2/2 is displayed in the upper right corner).

If the auto-print configuration is disabled, a 10-second preview will assist in ensuring a quality ECG acquisition prior to printing. When you acquire an ECG, the electrocardiograph captures the last 10 seconds. The relationship between the display and the printout is the same – what is displayed in the ECG acquisition view is what will be printed.

In order to change the speed, gain, filter, or printout format in the acquired ECG view, select **F5 (More)**. To manipulate the print format of the acquired ECG regardless of the plot format configuration setting, select **F4 (Fmt)**.

Select the function key corresponding to the desired print format. The acquired ECG view is then displayed and to make an ECG printout copy in the new plot format, select **F3 (Print)**. Select **F6 (Done)** to return to the real-time ECG view.

Storage

The device stores and saves all acquired ECGs automatically.

> ***NOTE****: Users may delete an acquired ECG from the acquired ECG screen. Once the delete selection has been made, a confirmation message will appear. Select* **Yes** *to permanently delete the record.*

Acquiring Rhythm Strips

Rhythm strips are printed in the format defined in the configuration: 3 or 6 channel for the ELI 150c; 3, 6 or 12 channel for the ELI 250c. See Section 4 for instructions to configure rhythm leads.

Begin routine rhythm strips by connecting the patient to the device and entering the patient identification information. After the last data entry field from the ID menu is completed, select **F6 (Done)** to return to the real-time ECG view. Select **RHY** to begin rhythm printing. You can also acquire a rhythm printout by selecting **RHY** without entering the patient ID.

> ***NOTE:*** *Rhythm printouts are only possible from the real-time ECG view.*
>
> ***NOTE:*** *Rhythm acquisitions are only printed and not stored in the device.*

The rhythm activity screen appears as soon as the printer begins printing the rhythm strip. The waveform display format is similar to the real-time ECG view; however, new function keys are available during rhythm printing.

In addition to manipulating **Speed, Gain,** and **Filter**, the user can toggle different lead groups: change lead groups during printing by selecting **F2 (Leads)**. The change in lead groups is apparent on the printout whereas the waveform display will remain in the default display of 2.5 seconds of Leads I, II, and V1-V6.

During 3-channel rhythm printing, the available lead groups are:

1. Default (user-selected in configuration)
2. I-II-III
3. aVR, aVL, aVF
4. V1-V2-V3
5. V4-V5-V6

During 6-channel rhythm printing, the available lead groups are:

1. Default (user-selected in configuration)
2. I-II-III-aVR-aVL-aVF
3. V1-V2-V3-V4-V5-V6

During 12-channel rhythm printing (ELI 250c only), the complete 12 leads are printed simultaneously.

During rhythm printing, place the printer in Standby mode by pressing **F6 (Stby)**. To continue rhythm printing for the same patient without advancing to a new page, select **F6 (Cont)**. To stop the rhythm printing, press **STOP** and the printer will automatically form feed in preparation for a new patient's rhythm recording or ECG

SYSTEM SETTINGS

Setting Technician Password

1. From real-time ECG view, select **F6 (More)** followed by **F5 (Set Time/Date)**.
2. While holding down ⬆ **(SHIFT)**, depress **ALT** and **P** simultaneously.
3. If required, enter password. This will automatically advance you to the set passwords display.

   NOTE: The factory default password is "admin" (lowercase, no quotation marks); it is suggested that the password be changed after installation of the unit.

4. Enter a technician password followed by a second entry to confirm.

   NOTE: Password is case sensitive and alphanumeric.

5. From this display, select **F6 (Exit)** to return to real-time ECG view.

Configuration Menus

The configuration pages define all operational conditions that do not change on a daily or patient-to-patient basis. Once you set these default conditions, you will rarely need to use the configuration screens again. To access the configuration menus:

1. From real-time ECG view, select **F6 (More)** followed by **F5 (Set Time/Date)**.
2. While holding down ⬆ **(SHIFT)**, depress **ALT** and **C** simultaneously.
3. Using the keyboard, enter "admin" (lowercase, no quotation marks). The first configuration screen will appear. Notice the page indicator in the upper right-hand corner.

To navigate the configuration menus:

- Use **F4 (Page)** to toggle through the configuration pages; use ⬆ **(SHIFT), F4 (Page)** to toggle in reverse.
- Use **F1 (▲)** and **F2 (▼)** to move back and forth through each configuration option.
- Use **F3 (►)** to toggle through pre-programmed available settings per configuration field.
- Use **F6 (Exit)** to return to real-time ECG view. Any changes you have made will be saved.
- Use **BKSP** to erase entry errors.

To print the device's configuration settings, select **F6 (More)** from real-time ECG view. Select **F6 (More)** again followed by **F1 (Print Configuration)**. The configuration printout captures every configuration setting: the software version, the cart number of the device, and the date and time that the configuration printout occurred.

Summary of Configuration Menus

Configuration Parameter	Definition
Software Version	Displays software version on printout and display
Cart Number	Numeric field 0 to 65535
Site Number	Numeric field 0 to 4095
Site Name	Alphanumerical field (30 digits)
Telephone Number	Alphanumerical field (45 digits)
Language	Available software languages
Volume	Numerical field 0 to 8
Battery Timeout	10 min, 30 min, 60 min
ECG Storage	Normal or expanded (optional) — configured at time of purchase
ID Format	Short, Long, Custom
Auto-Fill ID	YES/NO
AC Filter	50 Hz, 60 Hz, None
Paper Speed	25 or 50 mm/sec
Filter	Frequency response for printouts: 40 Hz, 150 Hz, 300 Hz
Height Units	Inches or Centimeters
Weight Units	Pounds or Kilograms
Interpretation	YES/NO
Reasons	YES/NO
Append	Unconfirmed Report, Reviewed by
# of Copies	0 – 9
Copies with Interp.	YES/NO
Delete Rule	Post Plot, Post Transmit
Storage Resolution	Normal or High
Pace Spike Channel	YES/NO
ID Edit Disable	YES/NO
Cap Lock	YES/NO
Use A4 paper (ELI 250c only)	YES/NO/Smart
Rhythm Format	3 or 6 channel (ELI 150c); 3, 6, or 12 channel (ELI 250c)
3 Rhythm Lead 1	V1-V6, I, II, III, aVR, aVL, aVF
3 Rhythm Lead 2	V1-V6, I, II, III, aVR, aVL, aVF
3 Rhythm Lead 3	V1-V6, I, II, III, aVR, aVL, aVF
6 Rhythm Lead 1	V1-V6, I, II, III, aVR, aVL, aVF

Summary of Configuration Menus (continued)

Configuration Parameter	Definition
6 Rhythm Lead 2	V1-V6, I, II, III, aVR, aVL, aVF
6 Rhythm Lead 3	V1-V6, I, II, III, aVR, aVL, aVF
6 Rhythm Lead 4	V1-V6, I, II, III, aVR, aVL, aVF
6 Rhythm Lead 5	V1-V6, I, II, III, aVR, aVL, aVF
6 Rhythm Lead 6	V1-V6, I, II, III, aVR, aVL, aVF
Plot Format	3, 3+1, 3+3, 6 channel; Cabrera or standard (ELI 150c) 3+1, 3+3, 6, 6+6, 12 channel; Cabrera or standard (ELI 250c)
3+1 Rhythm Lead	V1-V6, I, II, III, aVR, aVL, aVF
3+3 Rhythm Lead 1	V1-V6, I, II, III, aVR, aVL, aVF
3+3 Rhythm Lead 2	V1-V6, I, II, III, aVR, aVL, aVF
3+3 Rhythm Lead 3	V1-V6, I, II, III, aVR, aVL, aVF
Bar Code Scanner	YES/NO
Avg RR	YES/NO
QTcB	YES/NO
QTcF	YES/NO
ECG Capture	Last 10 or Best 10
Encryption Key	Up to 16 characters
Band Mode (GPRS only) (ELI 150c only)	850/900/1700(AWS)/1900/2100 MHz
DHCP (active for LAN or WLAN)	YES/NO
IP Address (active for LAN or WLAN)	XXX.XXX.XXX.XXX
Def Gateway (active for LAN or WLAN)	XXX.XXX.XXX.XXX
Sub Net Mask (active for LAN or WLAN)	XXX.XXX.XXX.XXX
Host IP (active for LAN or WLAN)	XXX.XXX.XXX.XXX
Port Number (active for LAN or WLAN)	Numeric field (9 digits)
Security	None, WEP128, WEP64, WPA-PSK, WPA-LEAP, WPA-PSK64, WPA-PSK128, WPA-LEAP 64, WPA-LEAP128, WPA2-PSK, WPA2-PEAP
LAN MAC	XX XX XX XX XX XX
WLAN MAC	XXXXXXXXXXXX
SSID	Alphanumerical field (30 digits) (not on printout)

Summary of Configuration Menus (continued)

Configuration Parameter	Definition
WEP Key	Numeric (1 digit) (not on printout); valid range 1-4
WEP Key ID	Alphanumerical field (26 digits) A-F, 0-9 (not on printout)
PSK Passphrase	Alphanumeric field (64 digits) (not on printout)
LEAP User Name	Alphanumeric field (32 digits) (not on printout)
LEAP Password	Alphanumeric field (32 digits) (not on printout)
PEAP User Name	Alphanumeric field (63 digits) (not on printout)
PEAP Password	Alphanumeric field (63 digits) (not on printout)
Comm Protocol	UNIPRO or DICOM
Sync Mode	None, XMT, XMT+Orders (XMT+MWL if DICOM selected)
Sync Date/Time	YES/NO
XMT Mandatory Fields	None, Last Name, ID, and/or Tech ID

Configuration Settings

Software Version

Identifies the software version of your electrocardiograph.

Cart Number

Indicates which electrocardiograph acquired or transmitted a particular ECG.

Site Number

Identifies the site of your device. Site numbers designate the hospital, clinic, or institution for ECG records stored in an E-Scribe system and must be defined for transmitting and retrieving ECGs from that system. You can use up to four digits for the site number. Numbers from 0 – 4095 are supported.

Site Name

Defines your clinic, hospital, or office name. You can enter up to 30 alphanumeric characters. The site name prints at the bottom, left edge of the ECG printout.

Telephone Number

Specifies the telephone number for internal modem transmission to another unit or to an E-Scribe system. Enter up to 45 numeric characters.

You may need to dial a **9** to get an outside line. To wait for an additional dial tone, use the letter **W**.

EXAMPLE: 9**W**14145554321

To insert a pause, use a comma (**,**).
To change tone dialing to pulse dialing, use the letter **P**.

EXAMPLE: **P**14145554321

(If necessary, you can use both the letter **W** and the letter **P** in the same phone number.)

TIP: *To quickly delete or modify a phone number, use a shortcut. From the application screen, simultaneously press* **↑ (SHIFT) + ALT + P.** *To edit an existing telephone number, use the* ***Tab*** *key.*

Language

There are several languages available on the electrocardiograph.

CAUTION: *Function labels are immediately translated upon selecting a new language and exiting the configuration screen.*

If an unknown language is visible, use the following steps to revert to the language of your country:

1. **F6 (More)** from real-time ECG view.
2. Select **F5 (Set Time/Date).**
3. Simultaneously press **↑ (SHIFT) + ALT + C.**
4. Enter password (“admin”)
5. Press **F2 (▼)** four times.
6. Press **F3 (►)** until the desired language appears.
7. **F6 (Exit)** to return to real-time ECG view.

Alphabets of specific languages may require use of special characters in demographic fields. This is accomplished by using the **SYM** key on the keyboard.

Volume

Defines the keyboard click loudness. Available settings range from 0 (off) to 8 (loud).

Battery Time Out

Determines when the electrocardiograph will switch off in order to conserve the battery life of the device. The battery time out will only occur if the keyboard has not been depressed for the time specified. The battery time out setting is ignored if an active ECG signal is detected during transmission or while rhythm printing.

ECG Storage

Indicates ECG storage capacity. Normal indicates standard memory capacity of 40 patient records. Expanded indicates the optional expanded memory (200 patient records) has been installed.

ID Format

Defines the format for the patient demographic information prompts. There are two standard formats: short or long. A custom ID format can be downloaded from ELI Link or an E-Scribe system. See Appendix A to download a custom ID.

The short format includes the patient's last and first name, patient ID number, date of birth (automatically calculates the age), and gender.

The long format is identical to the standard format except that it includes the patient's first name, room, and comment fields.

Auto-Fill ID

When enabled, the device will automatically populate last name, first name, date of birth, age, and gender in the ID screen if records with matching patient ID are found in the ECG directory.

AC Filter

The device removes 60 Hz or 50 Hz interference. The setting you select depends on the line frequency in your country. Always use the 60 Hz setting in the U.S. If AC interference is present, check to see that the proper AC filter is selected.

Paper Speed

Configure to 25 mm/s or 50 mm/s for default ECG printouts. For rhythm printouts and display, speeds of 5 mm/s or 10 mm/s are also available. See Section 3 to change speeds for display or rhythm printing. Paper speed is printed at the bottom right corner of the ECG printout.

Filter

The ECG plot-frequency filter (or print filter) can be set to 0.05 to 40 Hz, 0.05 to 150 Hz, or 0.05 to 300 Hz. The plot-frequency filter does not filter the acquired digital record. A 40 Hz plot-filter setting will reduce the noise (40 Hz and higher frequencies) on the printed ECG, and a 150 Hz plot-filter setting will reduce the noise (150 Hz and higher frequencies) on the printout; a 300 Hz plot-filter setting will not filter the printed ECG. The filter setting is printed at the bottom right corner of the ECG printout.

WARNING: *When the 40 Hz filter is used, the frequency response requirement for diagnostic ECG equipment cannot be met. The 40 Hz filter significantly reduces high-frequency components of the ECG and pacemaker spike amplitudes, and is recommended only if high-frequency noise cannot be reduced by proper procedures.*

Height Units
Weight Units

Defines the units of height (in/cm) and weight (lb/kg). Settings are selected independently of each other, allowing for metric or U.S. forms of measurement to be used simultaneously or separately.

Interpretation

The device automatically analyzes ECGs and prints the optional interpretation on the ECG printout. This setting allows you to select or suppress the “interpretive” text on the ECG report.

> ***NOTE:*** *The ECG interpretations offered by the device are only significant when used in conjunction with a physician over-read as well as consideration of all other relevant patient data.*

Reasons

The reasons statements indicate why a particular interpretive statement was printed. Reasons statements print enclosed in [square brackets] within the interpretive text if the interpretation option is turned on. Turning the reasons statement function on or off does not affect the measurements performed or the interpretive statements selected by the analysis program.

For Example:
Anteroseptal Infarct [40+ ms Q WAVE IN V1-V4]
Where “Anteroseptal Infarct” is the interpretive statement, and “40+ ms Q WAVE IN V1-V4” is the reason statement or explanation as to why the interpretive statement was printed.

Append

A status or statement phrase can be appended to the ECG and printed under the interpretive text printout. Either "unconfirmed report" or "reviewed by" can be selected.

Number of Copies

Defines the number of printed copies when an ECG is taken. A zero (0) setting prints no ECG; one (1) prints the original; two (2) prints the original plus 1 copy, and so on. Up to 9 copies may be selected.

Copies with Interpretation

Defines whether or not printed copies will include interpretation. The clinician may request the first ECG printout with the interpretation included. Additional copies may be printed with or without the interpretation.

Delete Rule

Defines the rule to mark ECGs as deleted in the ECG directory. ECGs that are marked for deletion will be automatically removed or erased based on their acquisition date (a first-in/first-out philosophy) to make room for the new ECG record. ECGs are only erased from the directory when they are marked for deletion and if the directory becomes full. More than one ECG may be removed from the directory in order to make room for the new incoming record. The delete rule selections are:

Post Plot = ECG is automatically marked for deletion after printing
Post Transmit = ECG is automatically marked for deletion after transmission

Storage Resolution

Dictates the resolution of all stored ECG records. The resolution setting is either Normal or High. If the value is set to High, the stored ECG will have a high resolution. As a result, the record size will be large and will reduce the storage capacity in the ECG directory.

Pace Spike Channel

Determines whether a pacemaker spike(s) notification marker(s) will display at the base of the ECG printout.

ID Edit Disable

Selecting YES allows the ID to be edited at any time before the completion of the record or while still in the acquired screen. Once the acquired screen has been left and the record is stored in the directory, the ID demographics can no longer be edited at the electrocardiograph.

Caps Lock

All character entry is translated to uppercase.

Use A4 Paper

The ELI 250c accommodates use of Z-fold thermal paper in either letter size (8.5 x 11 inches; 216 x 279 mm) or A4 size (8.27 x 11.69 inches; 210 x 297 mm). The provided paper tray spacer is required for use with A4 size paper.

Rhythm Formats

Defines the default values for rhythm printing. It is possible to set a 3 or 6-channel default rhythm format for the ELI 150c. For the ELI 250c, a 3, 6, or 12-channel default rhythm format is possible. Define rhythm leads one through three to customize a 3-channel rhythm printout or define rhythm leads one through six to customize the 6-channel rhythm printout.

Plot Format

Defines the default for one of the available plot formats in either standard or Cabrera presentation. Please note that regardless of the plot format selected, 10 seconds of 12 leads are always stored.

The ECG plot options are:

Format Option	ECG Data
3+1	2.5 seconds of 12 leads in a 3-channel format, plus 10-second rhythm strip of one user-selectable lead in a 1-channel format. Cabrera also available.
3 (ELI 150c only)	2.5 seconds of 12 leads in a 3-channel format. Cabrera also available.
6	5 seconds of 12-leads in a 6-channel format. Cabrera also available.
3+3	2.5 seconds of 12 leads in a 3-channel format, plus 10-second rhythm strip of user-selectable leads in a 3-channel format. Cabrera also available.
12 (ELI 250c only)	10 seconds of 12 leads in a one page printout.
6+6 (ELI 250c only)	5 seconds of 6 leads in a 6-channel format, plus 10-second rhythm strip of user-selectable leads in a 6-channel format. Cabrera also available.

Rhythm Leads

Displays continuous rhythm of selected ECG leads and permits printing of selected leads. User may toggle between selected leads, system set leads, or I, II, III, aVR, aVL, and aVF followed by V1, V2, V3, V4, V5, and V6.

> ***NOTE:*** *Rhythm acquisition is not stored in memory, only printed.*
>
> ***NOTE:*** *See Section 3 to acquire a rhythm printout.*

Bar Code Scanner

Enabling this option will allow for the use of a Welch Allyn approved USB bar code scanner.

Average RR

Enabling this option will display an averaged RR value to appear on the report.

QTcB

Enabling this option will display a Bazett's corrected QT value on the report along with the default linear QTc value.

QTcF

Enabling this option will display a Fridericia corrected QT value on the report along with the default linear QTc value.

ECG Capture

Up to 5 minutes accumulated ECG data can be acquired internally for use with the Best 10 feature. The device automatically selects the best 10 seconds from within the 5-minute buffer.

Users can switch between BEST 10 or LAST 10 by selecting **F5 (More)** followed by **F5 (Last)** or **F5 (Best)** depending on the current view.

Encryption Key

Encryption Key is a sequence of numbers used to encrypt or decrypt data and can consist of up to 16 alpha/numeric characters. All transmissions from x50c are sent using AES 256 bit encryption. The encryption key in the config menu allows the user to set a custom pre-shared key between the cart and ELI Link version 4.00 or later (all carts transmitting to one ELI Link must share the key) otherwise a default hidden key will be used.

Band Mode

Use 850/1900 MHz (US) or 900/1800 MHz (EU). (Applies to ELI 150c only.)

DHCP

Defines whether the Dynamic Host Configuration Protocol (DHCP) will be used to obtain an IP address. If DHCP is Yes, the network will automatically and dynamically assign an IP address. If DHCP is No, you must enter the IP address, def gateway, and sub net mask.

> ***NOTE:*** *All parameters related to network connection must be entered under the direction of the IT Manager of the facility where the device is installed. See Appendix A for more information on device connectivity settings.*

> ***NOTE:*** *Network settings for LAN (first page of settings) and those for WLAN or GPRS (second page of settings) are independent from each other.*

IP Address

Enter the fixed IP address for network transmissions (if DHCP is not selected).

> ***NOTE:*** *An IP address will be required for both LAN and WLAN applications.*

Def Gateway

Enter the address of the default gateway (if DHCP is not selected).

Sub Net Mask

Enter the sub net address (if DHCP is not selected).

Host IP

Enter the IP address of the host server.

> ***NOTE:*** *Addresses are always entered as 4 sets of 3 digits; therefore, an address of 192.168.0.7 must be entered as 192.168.000.007.*

Port Number

Enter the port number used by the host server.

LAN MAC

Shows the MAC address of the LAN.

Security (WEP)

Wired Equivalent Privacy (WEP) is an encrypted security protocol (part of the 802.11 standard). Access points can have multiple WEP keys stored. Each one of them is identified by a number (e.g., 1, 2, 3, 4).

WEP Key

Enter the WEP key number.

WEP Key ID

Enter the 128-bit WEP key ID value (26 digits in 13 sets of two digits).

WLAN MAC

Shows the MAC address of the device's wireless module for configuring access points.

SSID

Service Set Identifier (SSID) is the name of the wireless network. All ELI 150c electrocardiographs that will transmit to the same network must have the same SSID name. This field is case sensitive.

WPA-PSK/WPA2-PSK

Allows for implementation of the "personal mode" of WPA. This mode of encryption employs Temporal Key Integrity Protocol (TKIP) which dynamically changes keys as the system is used.

PSK Passphrase

The passphrase may be from eight to 63 ASCII characters or 64 hexadecimal digits (256 bits).

WPA-LEAP

Cisco® LEAP (Light Extensible Authorization Protocol) enables use of the device with wireless networks employing the LEAP encryption protocol.

LEAP User Name

User name can be up to 32 characters in length.

LEAP Password

LEAP password can contain up to 32 characters.

WPA2-PEAP

Enables use of the device with wireless networks employing the PEAP encryption protocol.

PEAP User Name

User name can be up to 63 characters in length.

PEAP Password

Password can contain up to 63 characters.

Access Point Name

Access Point Name can be up to 120 characters in length.

Access Point User Name

Access Point User Name can be up to 120 characters in length.

Access Point Password

Access Point Password can be up to 120 characters in length.

Comm. Protocol

Select UNIPRO OR DICOM. DICOM is only available if the DICOM option has been installed.

> ***NOTE:*** *This parameter must be entered under the direction of the IT Manager of the facility where the device is installed.*
>
> ***NOTE:*** *Units ship by default with Comm. Protocol set to UNIPRO or DICOM. The UNIPRO or DICOM setting is not supported by E-Scribe or ELI Link versions prior to V4.00. For questions about compatibility of your device with ELI Link and UNIPRO or DICOM, contact Welch Allyn Technical Support.*

Sync Mode

Select None, XMT, or XMT+Orders (XMT+MWL if DICOM enabled). None requires a manual transmission of reports and then a second manual request to receive orders from the cardiology management system. XMT will automatically transmit the report; XMT+Orders will both transmit the report and retrieve the orders.

Sync Date/Time

Select Yes or No. Yes will synchronize the date/time with the approved cardiology management system. With No, there will be no date/time synchronization. Date/time synchronization is done through ELI Link V4.00 or later.

XMT Mandatory Fields

Defines fields required for ECG transmission to the cardiology management system. None will allow data transmission without limitation; Last Name requires the technician to enter a minimum of the Last Name; ID requires the technician to enter a minimum of the patient's ID; Tech ID requires the technician to enter a minimum of the technician's initials. You may also select each of these independently allowing for any multiple required selections as well.

ECG DIRECTORY

The standard ECG directory saves up to 40 individual ECG records. The optional expanded memory permits up to 200 individual ECG records.

To access the ECG directory, select F6 (More) followed by F1 (Directory of Stored ECGs) from the real-time ECG view.

> *NOTE: A password may be required in order to enter the ECG directory. Obtain the password from the department Administrator.*
>
> *NOTE: In the ECG directory list,* "P" *represents the record has been printed,* "X" *represents the record has a delete status, and* "T" *represents the record has been transmitted.*
>
> *NOTE: Records marked for deletion will be maintained on the display.*

Management of the ECG record is performed within the directory of stored ECGs. The desired record must be highlighted in order to view, print, edit, add demographics, or to change delete status.

Use **F1 (▼/▲)** to navigate by line down the ECG directory; use **⬆ (Shift), F1 (▼/▲)** to move up. Similarly, use **F2 (▼▼/▲▲)** to page down the ECG directory; use **⬆ (Shift), F2 (▼▼/▲▲)** to page up. To quickly select a patient name, use the keyboard to enter the first few letters of the last name. The letters will be displayed in the lower left corner of the display screen and the desired name will automatically be highlighted.

An ECG may be stored in the directory but have a "delete status" (indicated by "X"). The directory saves records marked for deletion in the event that you may want to recover the ECG at a later time. Records are automatically marked for deletion based on the delete rule configuration (see Section 4). To manually mark an ECG record for deletion, highlight a name from the ECG directory and select **F4 (Delet)**. An "**X**" will appear in the far right-hand column of the directory. To remove the delete status, re-highlight the name and select **F4** again. All stored ECGs will remain in the directory until it becomes full. When necessary to store a newly acquired ECG, only those records that have been marked for deletion will be removed.

To view a specific ECG record, highlight the desired name from the directory list and press **F3 (Selec)**. The selected ECG is presented in acquired ECG view. Toggle through the available waveform formats by selecting **F2 (Leads).** To make an additional copy of the ECG, select **F3 (Print)**. To view or change the patient demographics, select **F1 (ID)**. To return to the ECG directory, select **F6 (Done).**

In order to change the speed, gain, filter, or printout format in the acquired ECG view, select **F5 (More)**. To manipulate the print format of the acquired ECG regardless of the plot format configuration setting, select **F4 (Fmt)**. Select the desired plot format setting and return to the acquired ECG view.

The directory is easily sorted either by name, ID, or date. To sort the ECG records, select **F5 (More)** from the ECG directory.

- Select **F1** to sort the directory by patient name (patient ID and time/date are displayed in the top row)
- Select **F2** to sort the directory by patient ID (patient name is displayed in the top row)
- Select **F3** to sort the directory by acquisition date (patient name is displayed in the top row)

To make a printout of the ECG directory, select **F4 (Print Directory**). The directory lists stored ECGs based on how you have the directory sorted. The printout indicates if the ECGs have been printed, marked delete, or transmitted with an "X" in the appropriate column. Select **F6 (Exit)** to return to the ECG directory.

ECG Order List

To display the ECG order list, select F4 (Order) from the patient ID screen. The ECG order list is comparable to the ECG directory in looks and in practice; you can sort the list by name, ID, or date. To sort the orders, first select **F5 (More)**:

Select **F1** to sort the orders by patient name (ID, time, and date are displayed in the top row)
Select **F2** to sort the orders by patient ID (name is displayed in the top row)
Select **F3** to sort the orders by acquisition date (name is displayed in the top row)

To make a printout of the orders list, select **F4 (Print Orders).** Select **F6 (Exit)** to return to the ECG order list.

> *NOTE: A password may be required in order to enter the ECG Order List. Obtain the password from the department Administrator.*

CONNECTIVITY AND ECG TRANSMISSION

ECG Transmission

You may transmit ECGs to ELI Link, or to a third party EMR using an optional factory installed internal modem, LAN, WLAN, or optional integrated GPRS mobile connection (GPRS option applies to ELI 150c only): all the mentioned transmission modes can use the Welch Allyn UNIPRO or DICOM communication protocol.

> ***NOTE:*** *Units ship by default with Comm Protocol set to UNIPRO. The UNIPRO setting is not supported by E-Scribe versions prior to V8.10 or ELI Link versions prior to V3.10. For questions about compatibility of your device with E-Scribe or ELI Link and UNIPRO, contact Welch Allyn Technical Support.*

Before transmitting ECGs, certain configuration options must be set in system settings depending upon the transmission media used and the electronic storage media you are transmitting to (see Section 4).

> ***NOTE:*** *Telephone transmission is available with internal modem only.*

> ***NOTE:*** *In order to properly connect to telephone lines, the device's internal modem needs to be set on the proper country code. This is an internal setting and should not be confused with International calling codes.*

The WLAN performance of the device may vary due to changes in RF (radio frequency) properties at your site or to environmental conditions. If you are experiencing intermittent connectivity in certain areas of your facility, it may be necessary to re-initiate the transmission process. You can also consult your hospital IT department or your Welch Allyn technical service representative regarding modification of your WLAN to improve system performance.

To transmit records, select **SYNC**. To stop transmissions, use the **STOP** key.

To transmit one ECG, select **F2 (Select)** to choose a record from the patient directory. Use **F1 (▼/▲)** to navigate by line down the directory list; use **⬆ (Shift), F1 (▼/▲)** to move up. Similarly, use **F2 (▼▼/▲▲)** to page down the directory list; use **⬆ (Shift), F2 (▼▼/▲▲)** to page up. To quickly select a patient name, use the keyboard to enter the first few letters of the last name. The letters will be displayed in the lower left corner of the display screen and the desired name will automatically be highlighted. When the desired record is highlighted, use **F3 (Sync)** to transmit the individual ECG.

To batch transmit all records in the directory, select **F1 (Batch)**. In a batch transmission, only those records which have not been previously transmitted or marked for deletion will be transmitted. After the transmission of your record(s), the real-time ECG view is displayed

Modem Transmission

For a modem transmission, set the Sync media to modem. Connect the device to a standard telephone jack with the provided phone line cable. Plug the cable into the telephone jack located on the back of the device and the other end into a telephone wall jack. Confirm telephone number in the configuration settings.

***CAUTION**: Use only No. 26 AWG or larger telecommunication line cord.*

Modem Initialization

The modem initialization string is country specific. At the time of production, the modem initialization string is configured for the country of manufacture; however, if the unit is relocated to a different country, the modem initialization string will need to be modified.

From the real time ECG view:

1. Power on the device.
2. Press **F6 (More)**.
3. Simultaneously press and hold **SHIFT+ALT+M**.
4. The country code will display on the bottom of the screen.
5. Verify the code is correct by using the table in this section. If the code is correct for your country, press **F6 (Exit)**.
6. If the code is incorrect for your country, press **F2** and enter "+CGI=", then enter the correct code for your country.
7. Press **F1** to send the new code to the modem.
8. After the code has been sent, the device will query the modem and display its current configuration.
9. Press **F6 (Exit)** to end the procedure.

MODEM COUNTRY CODE LIST

Country	Code	Country	Code
Afghanistan	34	Canary Islands	34
Albania	34	Cape Verde	34
Algeria	34	Cayman Islands	34
American Samoa	34	Central African Republic	34
Andorra	34	Chad	34
Angola	34	Chile	34
Anguilla	34	China	34
Antigua and Barbuda	34	Colombia	34
Argentina	34	Congo	34
Armenia	34	Congo, The Democratic Republic of the	34
Aruba	34	Cook Islands	34
Australia	1	Costa Rica	34
Austria	34	Côte D'Ivoire	34
Azerbaijan	34	Croatia	34
Bahamas	34	Cyprus	34
Bahrain	34	Czech Republic	25
Bangladesh	34	Denmark	34
Barbados	34	Djibouti	34
Belarus	34	Dominica	34
Belgium	34	Dominican Republic	34
Belize	34	East Timor	34
Benin	34	Ecuador	34
Bermuda	34	Egypt	34
Bhutan	34	El Salvador	34
Bolivia	34	Equatorial Guinea	34
Bosnia and Herzegovina	34	Estonia	34
Botswana	34	Ethiopia	34
Brazil	34	Faero Islands	34
Brunei Darussalam	34	Fiji	34
Bulgaria	34	Finland	34
Burkina Faso	34	France	34
Burundi	34	French Guiana	34
Cambodia	34	French Polynesia	34
Cameroon	34	Gabon	34
Canada	34	Gambia	34
Georgia	34	Korea, Republic of (South Korea)	30
Germany	34	Kyrgyzstan	34
Ghana	34	Lao People's Democratic Republic	34

Country	Code	Country	Code
Gibraltar	34	Latvia	34
Greece	34	Lebanon	34
Greenland	34	Liberia	34
Grenada	34	Libya	34
Guadeloupe	34	Liechtenstein	34
Guam	34	Lithuania	34
Guatemala	34	Luxembourg	34
Guernsey, C.I.	34	Macau	34
Guinea	34	Macedonia, The Former Yugoslav Republic of	34
Guinea-Bissau	34	Madagascar	34
Guyana	34	Malawi	34
Haiti	34	Malaysia	30
Holy See (Vatican City State)	34	Maldives	34
Honduras	34	Mali	34
Hong Kong	30	Malta	34
Hungary	30	Martinique	34
Iceland	34	Mauritania	34
India	30	Mauritius	34
Indonesia	30	Mayotte	34
Iran	34	Mexico	34
Iraq	34	Moldova, Republic of	34
Ireland	34	Monaco	34
Isle of Man	34	Mongolia	34
Israel	,30	Montserrat	34
Italy	34	Morocco	34
Jamaica	34	Mozambique	34
Japan	10	Namibia	34
Jersey C.I.	34	Nauru	34
Jordan	34	Nepal	34
Kazakhstan	34	Netherlands	34
Kenya	34	Netherlands Antilles	34
Kiribati	34	New Caledonia	34
Kuwait	34	New Zealand	9
		Nicaragua	34
Niger	34	Swaziland	34
Nigeria	34	Sweden	34
Norway	34	Switzerland	34
Oman	34	Syrian Arab Republic	34
Pakistan	34	Taiwan	34
Palestine Territory, Occupied	34	Tajikistan	34

Country	Code	Country	Code
Panama	34	Tanzania, United Republic of	34
Papua New Guinea	34	Thailand	34
Paraguay	34	Thaiti	34
Peru	34	Togo	34
Philippines	30	Tonga	34
Poland	30	Trinidad and Tobago	34
Portugal	34	Tunisia	34
Puerto Rico	34	Turkey	34
Qatar	34	Turkmenistan	34
Reunion	34	Turks and Caicos Islands	34
Romania	34	Uganda	34
Russian Federation	34	Ukraine	34
Rwanda	34	United Arab Emirates	34
Saint Kitts and Nevis	34	United Kingdom	34
Saint Lucia	34	Uruguay	34
Saint Vincent and the Grenadines	34	USA	34
Samoa	34	Uzbekistan	34
Saudi Arabia	34	Vanuatu	34
Senegal	34	Venezuela	34
Seychelles	34	Viet Nam	30
Sierra Leone	34	Virgin Islands, British	34
Singapore	30	Virgin Islands, U.S.	34
Slovakia	34	Yemen	34
Slovenia	30	Yugoslavia	34
Solomon Islands	34	Zambia	34
South Africa	35	Zimbabwe	34
Spain	34		
Sri Lanka	34		
Sudan	34		
Surinam	34		

LAN Transmission

For a LAN transmission, connect the ethernet cable to the LAN connection at the rear of the device and set the Sync media to LAN in the configuration. It is necessary that the IT Manager of your facility set the device's LAN configuration values.

> ***NOTE:*** *Addresses are always entered as 4 sets of 3 digits; therefore, an address of 192.168.0.7 must be entered on the device as 192.168.000.007.*

CAUTION*: Possible damage to the device may occur if telephone cable is connected to the LAN connector.*

Ethernet Status LEDs

The device's LAN will support 10 and 100 mbps networks.

At the external LAN interface connector, the user is presented with two LEDs (Light Emitting Diodes). The two status indicator LEDs provide signals for "link status" and "packet transmit/receive". As the external connector is viewed from the outside rear of the device, the left LED remains illuminated when the network link is detected. The right LED flashes when a transmit or receive packet occurs or any traffic on the network is detected.

If DHCP is set to NO, your LAN access point will have a static network setting and the following parameters must be configured in the device:
IP Address
Default Gateway
Sub Net Mask

If DHCP is set to YES, your LAN access point will have an automatic network setting and IP address; default gateway and sub net mask do not need to be configured. In either DHCP setting, the following network parameters must be provided by your IT Manager:
Host IP
Port Number

> ***NOTE:*** *Addresses are always entered as 4 sets of 3 digits; therefore, an address of 192.168.0.7 must be entered on the device as 192.168.000.007.*

> ***NOTE:*** *All parameters related to network connection must be entered under the direction of the IT Manager of the facility where the device is installed. See also Appendix A for more information on device connectivity settings.*

> ***NOTE:*** *Network settings for LAN (first page of settings) and those for WLAN or GPRS (second page of settings) are independent from each other.*

If WEP security is disabled on your access point, then set security (WEP) to NO. If WEP security is enabled on your access point, the following wireless network parameters must be configured in the device by the IT Manager:
Security: WEP
WEP Key
WEP Key ID

> ***NOTE:*** *The range for the WEP key is 0-3. If the range on your access point is 1-4, then 0 at the device maps to 1 on the access point; 1 maps to 2 on the access point, etc.*

If your wireless security environment is WPA or WPA2 (Wi-fi Protected Access) then you will need to enter:
Security: WPA-PSK or WPA2-PSK
Passphrase:

NOTE: *The passphrase length is limited to 64 characters.*

If your wireless security environment is LEAP then you will need to enter:
Security: WPA-LEAP
LEAP User Name
LEAP Password

NOTE: *LEAP user name and password are limited to 32 characters.*

If your wireless security environment is PEAP then you will need to enter:
Security: WPA2-PEAP
PEAP User Name
PEAP Password

NOTE: *PEAP user name and password are limited to 63 characters.*

WLAN Transmission

For a WLAN transmission, set the Sync media to WLAN. It is necessary that the IT Manager of your facility configure the wireless access point(s) and E-Scribe workstation. It is also required that your IT Manager provide the device's WLAN configuration values. The device can be configured for Dynamic Host Configuration Protocol (DHCP) or static IP. Wireless security encryption options include WEP, WPA, WPA2, LEAP, and PEAP.

> ***NOTE:*** *Environmental conditions may affect the reliability of WLAN transmissions.*

> ***NOTE:*** *The location for antenna for GPRS and WLAN are interchangeable.*

If DHCP is set to NO, your wireless access point will have a static network setting and the following parameters must be configured in the device:
IP Address
Default Gateway
Sub Net Mask

If DHCP is set to YES, your wireless access point will have an automatic network setting and IP address; default gateway and sub net mask do not need to be configured. In either DHCP setting, the following wireless network parameters must be provided by your IT Manager:
Host IP
Port Number
SSID
Channel Number

> ***NOTE:*** *Addresses are always entered as 4 sets of 3 digits; therefore, an address of 192.168.0.7 must be entered on the device as 192.168.000.007.*

> ***NOTE:*** *All parameters related to network connection must be entered under the direction of the IT Manager of the facility where the device is installed. See also Appendix A for more information on device connectivity settings.*

> ***NOTE:*** *Network settings for LAN (first page of settings) and those for WLAN or GPRS (second page of settings) are independent from each other.*

If WEP security is disabled on your access point, then set security (WEP) to NO. If WEP security is enabled on your access point, the following wireless network parameters must be configured in the device by the IT Manager:
Security: WEP
WEP Key
WEP Key ID

> ***NOTE:*** *The range for the WEP key is 0-3. If the range on your access point is 1-4, then 0 at the device maps to 1 on the access point; 1 maps to 2 on the access point, etc.*

If your wireless security environment is WPA or WPA2 (Wi-fi Protected Access) then you will need to enter:
Security: WPA-PSK or WPA2-PSK
Passphrase:

> ***NOTE:*** *The passphrase length is limited to 64 characters.*

If your wireless security environment is LEAP then you will need to enter:
Security: WPA-LEAP
LEAP User Name
LEAP Password

NOTE: *LEAP user name and password are limited to 32 characters.*

If your wireless security environment is PEAP then you will need to enter:
Security: WPA2-PEAP
PEAP User Name
PEAP Password

NOTE: *PEAP user name and password are limited to 63 characters.*

NOTE: *When saving the WLAN configuration, the device may require several seconds to complete the saving procedure.*

GPRS Mobile Transmission

CAUTION: *GPRS mobile hookup time will vary depending on location. It may require between 5 and 60 seconds to initiate a communication link. Signal loss at the onset of transmission or during transmission may occur due to environmental variables.*

NOTE: *The location for antenna for GPRS and WLAN are interchangeable.*

GPRS option applies to ELI 150c only.

GSM (Global System for Mobile communications) is a world standard for digital cellular communications. GPRS (General Packet Radio Service) is the digital data transmission standard for the GSM network. Similar to GSM cellular phones, the ELI 150c GPRS mobile connectivity option requires a Subscriber Identity Module (SIM) smart card. A SIM comprises a microcontroller, ROM for programs, and EPROM for information. Information stored on the SIM includes the International Mobile Subscriber Identity (IMSI) which is a unique identifying number, plus various network-specific user and security data.

SIM cards and data network plans are not offered for sale by Welch Allyn and must be purchased separately from your local provider. The ELI 150c GPRS mobile connectivity option is factory installed. Please note that for GPRS mobile transmission, the SIM card must have data capabilities enabled.

For GPRS mobile transmission, set the Sync media to GPRS in the configuration.

The following wireless network parameters must be provided by the IT Manager of the facility where the receiving station (e.g. E-scribe) is located:
Host IP
Port Number

NOTE: *The receiving station's IP-address must be visible on the public network (Internet).*

The following parameters must be provided by the network service provider of the SIM card:
Access Point Name
Access Point User Name
Access Point Password

The Access Point Name (APN, also called WAP) is a string with structure "NetwordID.OperatorIdentifier".

SIM Card Installation

Power off the ELI 150c. Open the printer cover and remove the pack of thermal paper. There is a small access panel on the floor of the paper tray. Remove the screw and lift off the access panel.

Using your finger, slide the SIM card socket towards the back of the unit (follow the arrow printed on the circuit board to the "open position"). Again, using your finger, lift the socket upright. To insert the SIM card, hold the SIM card so the gold contact is facing you and the key (angle-notched corner) is in the upper right. Slide the SIM card in between the two recessed notches of the socket. Lower the socket so the SIM card key appears in the lower right corner. Slide the socket towards the front of the unit (follow the arrow on the circuit board to the "lock position").

NOTE: *Notched corner of SIM card must be located properly in socket. Do not force socket connector if SIM is not seated properly.*

Replace access panel, screw, and thermal paper. Power on the electrocardiograph.

If a wireless network carrier is not detected at the time of transmission (due to environmental conditions, i.e., poor signal), relocate or reposition the unit for a better signal and reattempt transmission.

In order to change a network carrier, you must scan the wireless network to determine what is detected and available for use. Select **F5 (Scan)**, a "scanning networks…" message will appear on the LCD. Once the scanning process is completed, the Select Networks screen is available. Highlight the desired network and press **F3 (Selec).**

Orders Download

> ***NOTE:*** *A custom ID must be downloaded before downloading the orders. Please reference the ELI Link user manuals, and Custom ID Download in this section.*

The device can download and process an ECG order list from ELI Link or another compatible electronic information management system.

Order lists containing the demographic information of patients requiring an ECG are designed in ELI Link or an E-Scribe system. The technician at the device selects the desired order code (e.g., a code specific to a department or floor) and the patients belonging to the order list. Once downloaded to the device, the ECG list for the selected order code is stored in the device as the order list (similar to the ECG directory). As with ECG data transmission, you can use any of the connectivity options to download the order list.

From real-time ECG view, select **F6 (More)** followed by **F3 (Orders Download)**. Use the appropriate function key to select the desired study group.

Use **F1 (▲)** and **F2 (▼)** to scroll through the list; use **F3 (Selec)** to select the desired order code. Confirm or deny your download by selecting **F2** or **F4**.

"Transmission Status" will be displayed for approximately 10 seconds followed by "Dialing: telephone number", "Waiting for Response", and "Connected". Once connected, the screen indicates the number of orders (ECGs) received for the order code. This only appears briefly before returning to the real-time ECG view. When the order list has been downloaded, you may select the patients who need ECGs. Select **F1 (ID)** from the real-time ECG view.

Custom ID Download

Custom ID formats are uniquely defined by your facility's needs. This customized ECG header information is designed in ELI Link and downloaded to the device.

From real-time ECG view, select **F6 (More)** followed by **F2 (Custom ID Download)**. "Transmission Status" will remain visible for approximately 10 seconds followed by "Waiting for Response", "Connected", and "Custom ID downloaded". A return to the real-time ECG view indicates the custom ID download is complete. The custom ID remains the new header format for all future ECGs until you select a different ID format in the configuration settings. You may alter the ID format configuration to short, standard, long, or custom based on your patient demographic entry needs. The custom ID is only deleted upon downloading a new custom ID or on the rare occasion of downloading software – it will not be lost due to power loss or switching to a different ID format.

> ***TIP:*** *Upon custom ID download, the ID format will assume the group name as designed in ELI Link or E-Scribe.*

NOTE: *The site number must be configured in the electrocardiograph and recognized as an established, valid site number at the E-Scribe before downloading the custom ID.*

TIP: *Confirm the baud rate in the configuration settings before downloading the custom ID from ELI Link or E-Scribe (applies to ELI 150c only).*

USB Memory

Both the ELI 150c and ELI 250c come equipped with a standard USB host port which can be used to transmit patient records from the device's internal memory to an external USB memory stick. In addition, either device can be equipped with an optional USBD (device) port. The optional USBD port can be used to directly connect the device to a PC running ELI Link V3.10 or later.

Transmission using the USB host port to a USB memory stick

USB memory communication media permits storage of patient records to an external USB memory stick. The files will be saved in UNIPRO32 format for transfer to the E-Scribe or a compatible electronic information management system.

NOTE*: Device is compatible with FAT32 formatted USB memory sticks.*

NOTE*: The USB memory stick must not contain any automatic features (e.g., Sandisk U3). Uninstall any features from the memory stick before connecting it to the device.*

NOTE*: All communication options (MODEM, LAN, WLAN, GPRS) including time sync and orders download are disabled when a USB memory stick is inserted in the device.*

NOTE*: Upon successful transmission the device display will state "Transmission status transmit complete. Press any key to continue." The total number of patient records transmitted to the USB memory stick will also appear.*

NOTE*: Patient records transmitted to a USB memory stick are marked as transmitted by the device.*

<u>Transferring Individual Patient Records to the USB Memory Stick</u>

- Place the USB memory stick into the USB host port on the back of the device.
- Select **F6 (More)** from real-time ECG view.
- Select **F1 (Directory of Stored ECGs)**.
- Select the patient record to be stored to the USB memory stick.
- Select **SYNC**.

<u>Transferring Batch Patient Records to the USB Memory Stick</u>

- Place the USB memory stick into the USB host port on the back of the device.
- Select **SYNC**.
- Select **F1 (Batch).**

Transmission using the optional USBD (device) port to a PC

The optional USBD port permits transmission of stored patient records to a PC using a direct USB cable. The patient records will be transmitted to an ELI Link application (requires V3.10 or later) and then exported and saved in various formats (see the ELI Link user manual).

Connecting the ELI 150c or ELI 250c to a PC

When connecting the device to a PC for the first time, the proper USB driver will need to be installed prior to use.

- Use a USBD cable to connect the device to a PC.
- When properly connected, the PC will automatically detect the device and automatically install the drivers.

Transmitting Patient Records to ELI Link

- Create both an Input folder and Output folder on the PC.
- Configure ELI Link to the individual Input and Output folders.
- Connect the ELI 150c or ELI 250c to the PC.
- "USB Device ready" will appear on the device display; a "Removable Disk" message will display on the PC.
- Using the PC mouse, select **Records** from the removable disk window displayed.
- Select the patient record(s) to be copied.
- Place the copied record(s) into the Input folder on the PC.
- After a period of 5 seconds, select the copied record(s) to view on the PC or print via PDF from the Output folder.

***NOTE**: Requires ELI Link V3.10 or later. See ELI Link user manual for further detail on settings.*

***NOTE**: User must create an Input and Output folder for records to be stored or retrieved for use in ELI Link.*

***NOTE**: Patient records transmitted to ELI Link are not marked as transmitted by the device.*

***WARNING:** Do not change or modify any information existing in any of the ELI 150c or ELI 250c folders that are visible on the PC in the removable disk file.*

***CAUTION:** To assure consistent operation and avoid confusion, connect only one ELI 150c or ELI 250c using the USB device port to a PC at a time.*

Network Test

Network test sends a command to the server to verify there is a network connection. The status will display for the clinician to review. The test information is also placed into the Log File for review.

To view the log type select **F6 (More)** from the real-time display, followed by **F4 (Network Test)**. When test is completed, select either **F3 (Log)** to review the log files or **F6 (Exit)**.

Network Log File

The ELI x50c will then present a sync log file that contains troubleshooting information and status information from the previous SYNC operation. This file will have up to 3 sections (Time Sync, Transmit and Receive Requests), based on the SYNC Mode and Time Sync configuration settings. The contents of this file will be retained for viewing until the next SYNC or Network Test operation has been completed. The information available will contain status information that is currently shown on the screen during the sync operation as well as more detailed connection information and error codes.

MAINTENANCE AND TROUBLESHOOTING

System Troubleshooting Chart

LCD Message	Problem	Correction
BATTERY LOW – CHARGE UNIT	Unable to acquire ECG or unable to print.	Charge the battery with AC power.
LEAD FAULT, NO ECG CAPTURE	Lead fail.	Correct faulty lead.
NO ANSWER	Unable to transmit ECG.	Check for correct phone number. Ensure modem and E-SCRIBE are online.
	Device is not responding	Press and hold the On/Off button for 10 seconds. Re-entry of date and time will be required after this function.

ECG Troubleshooting Chart

Affected Leads	Problem	Correction
LEADS OFF OR ONE OR MORE OF THE FOLLOWING: RA, LA, LL, V1, V2, V3, V4, V5, V6	Lead fail.	Indication of RL/RA/LA/LL/V1/V2/V3/V4/V5/V6. Check limb leads. Correct faulty lead(s).
Lead I and Lead II	Poor RA electrode or right arm tremor	Check patient prep; re-prep if necessary with new electrode.
Lead II and Lead III	Poor LL electrode or left leg tremor	Check patient prep; re-prep if necessary with new electrode.
Lead I and Lead III	Poor LA electrode, or left arm tremor	Check patient prep; re-prep if necessary with new electrode.
All	High Freq. Noise.	Adjust low pass filter setting; check proximity to power cables; check AC filter setting (50 Hz or 60 Hz).

Transmission Troubleshooting Chart

LCD Message	Problem	Correction
TRANSMIT FAILED	Unable to transmit ECG.	Check phone line. Ensure site number is valid. Try again.
ERROR-DICOM Not Enabled	A DICOM communication was attempted, but the unit is not configured for DICOM.	Configure the system to DICOM and reboot.
UNABLE TO SAVE ECG	No available memory. ECG data too noisy to store.	Press stop to continue. Transmit or mark records for deletion in the directory. Correct noise and try acquisition/storage again.

DHCP FAILURE	The WLAN module failed to get an address from DHCP.	Contact Welch Allyn Technical Service.
DPAC FAILURE	WLAN failed to initialize.	Contact Welch Allyn Technical Service.
CAN'T CONNECT TO ACCESS POINT	A link to the access point could not be established.	Ensure the IP address is correct. If problem persists, contact Welch Allyn Technical Service.

Transmission Troubleshooting Chart (continued)

LCD Message	Problem	Correction
Log File	Any of the above information will be presented in the Log File	Contact Technical Support
CAN'T CONNECT TO REMOTE LINK	A link to the access point was established, but the link to the destination failed.	Ensure the IP address is correct. If problem persists, contact Welch Allyn Technical Service.
TIME SYNC FAULT	Possible incorrect version of ELI Link or E-Scribe.	Install latest version.
UNABLE TO SAVE ORDER	Order storage failed.	Attempt to retransmit orders.
UNABLE TO SAVE WORK ITEM	DICOM order storage failed.	Directory full; mark records for deletion or delete records.
INCORRECT RESPONSE	Connection established, then failed.	Connection started but failed; attempt to reconnect.
NO CUSTOM ID	Received orders failed.	Previous Custom ID not compatible with current Custom ID, or no Custom ID.
PAPER QUEUE FAULT	Unable to print. Paper queue mark not detected as expected.	Add paper; manually advance page evenly past closure point of writer and close writer cover and press STOP.
CONNECTION FAILED	Unable to transmit or receive ECGs.	Check for correct baud rate, phone number, and cable connections or site number.
None	File not successfully transmitted via LAN.	Check share permissions on host device.
None	Unable to connect with LAN with crossover cable.	Implement hub vs. crossover cable.
Disabled	Pressing SYNC key	Enable SYNC MODE and/or set SYNC MEDIA in configuration

Power Off the Device

To completely shutdown the device, disconnect the AC power cord then press the ON/OFF button. Such a shutdown should always be performed prior to authorized repair of the device.

Test Operation

After cleaning and inspecting the device, proper operation of the unit may be confirmed by using an ECG simulator to acquire and print a standard 12-lead ECG of known amplitude. Printing should be dark and even across the page. There should be no evidence of print head dot failure (e.g., breaks in printing forming horizontal streaks). Paper motion should be smooth and consistent during printing. Waveforms should appear normal with proper amplitude and, without distortion or excessive noise. Paper should stop with perforations near the tear bar (indicating proper cue sensor operation).

Recommendations to Biomedical Staff

Following any service to the device or when non-compliant operation is suspected, Welch Allyn, Inc., recommends the following procedures:

- Confirm proper operation.
- Perform testing to ensure continued electrical safety of the device
  (use IEC 60601-1, ANSI/AAMI ES 60601-1, or IEC 62353 methods and limits).
  - patient leakage current
  - chassis leakage current
  - earth leakage current
  - dielectric strength or insulation resistance (mains and patient circuits, mains and signal input/output part (e.g., USB), mains and protective earth)

Battery Maintenance

The device houses an internal, sealed lead-acid battery. When installed, the battery has a shelf life of approximately six months without recharging. If the battery has been stored for a long period in a discharged state, it may not be able to regain its capacity even if it is recharged.

For information about replacing the battery, please refer to the device's service manual.

Welch Allyn, Inc., recommends that the device be plugged into AC power whenever possible to maximize battery life and for the user to develop a habit of recharging the battery before the unit indicates a "low battery" condition. (That is, reduced depth of discharge.) Battery life varies by how the battery is maintained and how much it is used. For improved battery life, keep the electrocardiograph plugged in when not in use.

The sealed lead-acid battery will provide optimum life when the unit is fully charged after each use. When the battery charge is depleted to its lowest level (10.6V), the device will automatically power down. To recharge a battery from its lowest level to 85%, 4 hours of recharging may be necessary. To reach 90%, 7 hours of recharging may be necessary. It may take longer to reach 100%. The device can be used with AC power while simultaneously charging.