Welch Allyn®
ELI® 280
Resting Electrocardiograph

User Manual

Manufactured by Welch Allyn, Inc., Skaneateles Falls, NY U.S.A.

CE 0459

CAUTION: Federal law restricts this device to sale by or on the order of a physician.

©2021 Welch Allyn This document contains confidential information that belongs to Welch Allyn, Inc., No part of this document may be transmitted, reproduced, used, or disclosed outside of the receiving organization without the express written consent of Welch Allyn, Inc., Welch Allyn is a registered trademark of Welch Allyn, Inc., AM12, ELI, E-Scribe, VERITAS, and WAM are trademarks of Welch Allyn, Inc., DICOM is the registered trademark of the National Electrical Manufacturers Association for its standards publications relating to digital communications of medical information.
Software V2.3.X.

The information in this document is subject to change without notice.

PATENT/PATENTS
hillrom.com/patents
May be covered by one or more patents. See above Internet address. The Hill-Rom companies are the proprietors of European, US, and other patents and pending patent applications.

Hillrom Technical Support
For information about any Hillrom product, contact Hillrom Technical Support at 1.888.667.8272, mor_tech.support@hillrom.com.

REF 80028783 Ver A
Revision date:2021-07

# 901132 ELECTROCARDIOGRAPH

Welch Allyn, Inc.
4341 State Street Road
Skaneateles Falls, NY 13153 USA

EC REP and EU IMPORTER

Welch Allyn Limited
Navan Business Park, Dublin Road,
Navan, Co. Meath C15 AW22
Ireland

**Authorized Australian Sponsor**
Welch Allyn Australia Pty. Ltd.
Unit 4.01, 2-4 Lyonpark Road
Macquarie Park NSW 2113
Phone 800 650 083

hillrom.com
Welch Allyn, Inc. is a subsidiary of Hill-Rom Holdings, Inc.

Hillrom™

# TABLE OF CONTENTS

**NOTICES** ..... **7**

Manufacturer's Responsibility ..... 7
Responsibility of the Customer ..... 7
Equipment Identification ..... 7
Copyright and Trademark Notices ..... 7
Other Important Information ..... 8
Notice to EU Users and/or Patients ..... 8

**WARRANTY INFORMATION** ..... **9**

Your Welch Allyn Warranty ..... 9

**USER SAFETY INFORMATION** ..... **11**

WARNING(S) ..... 11
Caution(s) ..... 14
Note(s) ..... 14
Wireless Data Transmission ..... 16
WLAN Option ..... 16

**EQUIPMENT SYMBOLS AND MARKINGS** ..... **17**

Symbol Delineation ..... 17
Package Symbol Delineation ..... 20
Touchscreen Function Control Icons ..... 21

**GENERAL CARE** ..... **23**

Precautions ..... 23
Inspection ..... 23
Cleaning and Disinfecting ..... 23
Disposal ..... 24

**ELECTROMAGNETIC COMPATIBILITY (EMC)** ..... **25**

Guidance and Manufacturer's Declaration: Electromagnetic Emissions ..... 26
Guidance and Manufacturer's Declaration: Electromagnetic Immunity ..... 27
Guidance and Manufacturer's Declaration: Electromagnetic Immunity ..... 28
Recommended Separation Distances Between Portable and Mobile RF Communications Equipment and the Equipment ..... 29
Regulatory Radio Compliance ..... 30

**INTRODUCTION** ..... **36**

Manual Purpose ..... 36
Audience ..... 36
Intended Use (Functional Purpose) ..... 36
Indications for Use ..... 36
System Description ..... 36
System Illustration ..... 38
Side View ..... 38
Rear View ..... 39
Base View ..... 39
Display Overview ..... 40
Display Parameters ..... 40
Function Control Icons ..... 41
Specifications ..... 43

Accessories ..... 44

**EQUIPMENT PREPARATION ..... 48**

Initial Startup ..... 48
Calibrating the Touchscreen Display ..... 48
Connecting the Acquisition Module ..... 48
Loading Paper ..... 49
Powering the ELI 280 ..... 52
Low Battery Failsafe Conditions ..... 53
Power Status ..... 53
Setting Date and Time ..... 54
Time Synchronization ..... 54
Installing the WLAN Antenna ..... 55
Important Version Information for WAM (Wireless Acquisition Module) ..... 55
Using the WAM Acquisition Module ..... 55
Using the AM12 Acquisition Module ..... 56
The LED indicates status of the connected leads: ..... 56
Using the AM12M Acquisition Module ..... 56

**RECORD AN ECG ..... 58**

Patient Preparation ..... 58
Patient Hookup ..... 58
Patient Demographic Entry ..... 60
ECG Acquisition and Printing with WAM or AM12 ..... 63
ECG Acquisition ..... 63
Best 10 Seconds of ECG ..... 66
Configuring the ECG Report ..... 66
Acquired ECG Storage ..... 67
Acquiring Rhythm Strips ..... 67

**CONNECTIVITY AND ECG TRANSMISSION ..... 68**

ECG Transmission ..... 68
Internal Modem Connection ..... 69
Local Area Network (LAN) Connection and Setup ..... 73
Wireless Local Area Network (WLAN) Connection and Setup ..... 74
Transmission Media Auto-Sync ..... 75
USB Connectivity ..... 76

**ECG DIRECTORY ..... 78**

ECG Directory ..... 78
Searching ECG Records ..... 78
Reviewing ECG Records ..... 79
Deleting ECG Records ..... 80
Erasing ECGs from the Directory ..... 80
Printing the ECG Directory ..... 80
ECG Orders ..... 80
Searching ECG Orders ..... 81
Worklist Management ..... 81
Sync Command ..... 81
MWL Query ..... 82
Custom ID Download ..... 82
Patient Demographic Query (PDQ) ..... 83

**SYSTEM SETTINGS ..... 84**

MENU COMMANDS AND UTILITIES ..... 84
DEVICE PASSWORDS ..... 86
CONFIGURATION SETTINGS: ABOUT ..... 87
CONFIGURATION SETTINGS: MODEM ..... 88
CONFIGURATION SETTINGS: SYSTEM ..... 89
CONFIGURATION SETTINGS: ECG ..... 92
CONFIGURATION SETTINGS: LAN ..... 96
CONFIGURATION SETTINGS: WLAN ..... 97
CONFIGURATION SETTINGS: DATE/TIME ..... 99
CONFIGURATION SETTINGS: CUSTOM ID ..... 99
CONFIGURATION SETTINGS: NETWORK ..... 99
CONFIGURATION SETTINGS: WAM ..... 99
CONFIGURATION SETTINGS: SERVICE ..... 99

**MAINTENANCE AND TROUBLESHOOTING ..... 100**

SYSTEM TROUBLESHOOTING CHART ..... 100
TOUCHSCREEN TROUBLESHOOTING CHART ..... 102
POWER OFF THE DEVICE ..... 103
TEST OPERATION ..... 103
RECOMMENDATIONS TO BIOMEDICAL STAFF ..... 103
BATTERY MAINTENANCE ..... 103
CLEANING THE THERMAL PRINTER ..... 104
CLEANING THE TOUCHSCREEN ..... 104

# NOTICES

## Manufacturer's Responsibility

Welch Allyn, Inc., is responsible for the effects on safety and performance only if:

- Assembly operations, extensions, readjustments, modifications, or repairs are carried out only by persons authorized by Welch Allyn, Inc.,
- The device is used in accordance with the instructions for use.

## Responsibility of the Customer

The user of this device is responsible for ensuring the implementation of a satisfactory maintenance schedule. Failure to do so may cause undue failure and possible health hazards.

## Equipment Identification

Welch Allyn, Inc., equipment is identified by a serial and reference number on the bottom of the device. Care should be taken so that these numbers are not defaced.

The ELI 280 product label is applied showing the unique identification numbers along with other important information printed on the label.

The serial number format is as follows:
YYYWWSSSSSSS
YYY = First Y is always 1 followed by two-digit Year of manufacture
WW = Week of manufacture
SSSSSSS = Sequence number of manufacture

The UDI label (when applicable) is placed below the product label. If the unit is configured for a modem, this label is placed to the right of the product label. If the unit is configured for WLAN, this label is placed to the right of the product label.

**AMXX Module Identification**
The wired Acquisition Module is identified with a product label on the back of the device and will have its own unique serial number and UDI label applied.

**Wireless Module Identification**
The Wireless Acquisition Module (WAM) is identified with a product label on the back of the device and has its own unique serial number and UDI label applied. When the ELI 280 is configured for the WAM, the UTK label is placed to the right of the product label and below the Modem or WLAN labels when present.

## Copyright and Trademark Notices

This document contains information that is protected by copyright. All rights are reserved. No part of this document may be photocopied, reproduced, or translated to another language without prior written consent of Welch Allyn, Inc.,

## Other Important Information

The information in this document is subject to change without notice.

Welch Allyn, Inc., makes no warranty of any kind with regard to this material including, but not limited to, implied warranties of merchantability and fitness for a particular purpose. Welch Allyn, Inc., assumes no responsibility for any errors or omissions that may appear in this document. Welch Allyn, Inc. makes no commitment to update or to keep current the information contained in this document.

## Notice to EU Users and/or Patients

Any serious incident that has occurred in relation to the device, should be reported to the manufacturer' and the competent authority of the Member State in which the user and/or patient is established.

# WARRANTY INFORMATION

## Your Welch Allyn Warranty

WELCH ALLYN, INC(hereafter referred to as "Welch Allyn") warrants that components within Welch Allyn products (hereafter referred to as "Product/s") will be free from defects in workmanship and materials for the number of years specified on documentation accompanying the product, or previously agreed to by the purchaser and Welch Allyn, or if not otherwise noted, for a period of twenty-four (24) months from the date of shipment.

Consumable, disposable or single use products such as, but not limited to, PAPER or ELECTRODES are warranted to be free from defects in workmanship and materials for a period of 90 days from the date of shipment or the date of first use, whichever is sooner.

Reusable product such as, but not limited to, BATTERIES, BLOOD PRESSURE CUFFS, BLOOD PRESSURE HOSES, TRANSDUCER CABLES, Y-CABLES, PATIENT CABLES, LEAD WIRES, MAGNETIC STORAGE MEDIUMS, CARRY CASES or MOUNTS, are warranted to be free from defects in workmanship and materials for a period of 90 days. This warranty does not apply to damage to the Product/s caused by any or all of the following circumstances or conditions:

a) Freight damage;

b) Parts and/or accessories of the Product/s not obtained from or approved by Welch Allyn;

c) Misapplication, misuse, abuse, and/or failure to follow the Product/s instruction sheets and/or information guides;

d) Accident; a disaster affecting the Product/s;

e) Alterations and/or modifications to the Product/s not authorized by Welch Allyn;

f) Other events outside of Welch Allyn's reasonable control or not arising under normal operating conditions.

THE REMEDY UNDER THIS WARRANTY IS LIMITED TO THE REPAIR OR REPLACEMENT WITHOUT CHARGE FOR LABOR OR MATERIALS, OR ANY PRODUCT/S FOUND UPON EXAMINATION BY WELCH ALLYN TO HAVE BEEN DEFECTIVE. This remedy shall be conditioned upon receipt of notice by Welch Allyn of any alleged defects promptly after discovery thereof within the warranty period. Welch Allyn's obligations under the foregoing warranty will further be conditioned upon the assumption by the purchaser of the Product/s (i) of all carrier charges with respect to any Product/s returned to Welch Allyn's principal place or any other place as specifically designated by Welch Allyn or an authorized distributor or representative of Welch Allyn, and (ii) all risk of loss in transit. It is expressly agreed that the liability of Welch Allyn is limited and that Welch Allyn does not function as an insurer. A purchaser of a Product/s, by its acceptance and purchase thereof, acknowledges and agrees that Welch Allyn is not liable for loss, harm, or damage due directly or indirectly to an occurrence or consequence therefrom relating to the Product/s. If Welch Allyn should be found liable to anyone under any theory (except the expressed warranty set forth herein) for loss, harm, or damage, the liability of Welch Allyn shall be limited to the lesser of the actual loss, harm, or damage, or the original purchase price of the Product/s when sold.

EXCEPT AS SET FORTH HEREIN WITH RESPECT TO REIMBURSEMENT OF LABOR CHARGES, A PURCHASER'S SOLE EXCLUSIVE REMEDY AGAINST WELCH ALLYN FOR CLAIMS RELATING TO THE PRODUCT/S FOR ANY AND ALL LOSSES AND DAMAGES RESULTING FROM ANY CAUSE SHALL BE THE REPAIR OR REPLACEMENT OF DEFECTIVE PRODUCT/S TO THE EXTENT THAT THE DEFECT IS NOTICED AND WELCH ALLYN IS NOTIFIED WITHIN THE WARRANTY PERIOD. IN NO EVENT, INCLUDING THE CLAIM FOR NEGLIGENCE, SHALL WELCH ALLYN BE LIABLE FOR INCIDENTAL, SPECIAL, OR CONSEQUENTIAL DAMAGES, OR FOR ANY OTHER LOSS, DAMAGE, OR EXPENSE OF ANY KIND, INCLUDING LOSS OF PROFITS, WHETHER UNDER TORT, NEGLIGENCE OR STRICT LIABILITY THEORIES OF LAW, OR OTHERWISE. THIS WARRANTY IS EXPRESSLY IN LIEU OF ANY OTHER WARRANTIES, EXPRESS OR IMPLIED, INCLUDING, BUT NOT LIMITED TO THE IMPLIED WARRANTY OF MERCHANTABILITY AND THE WARRANTY OF FITNESS FOR A PARTICULAR PURPOSE.

# USER SAFETY INFORMATION

**WARNING:** Means there is the possibility of personal injury to you or others.

**Caution:** Means there is the possibility of damage to the device.

**Note:** Provides information to further assist in the use of the device.

## WARNING(S)

- This manual gives important information about the use and safety of this device. Deviating from operating procedures, misuse or misapplication of the device, or ignoring specifications and recommendations could result in increased risk of harm to users, patients and bystanders, or damage to the device.
- Device captures and presents data reflecting a patient's physiological condition that when reviewed by a trained physician or clinician can be useful in determining a diagnosis; however, the data should not be used as a sole means for determining a patient's diagnosis.
- Users are expected to be licensed clinical professionals knowledgeable about medical procedures and patient care, and adequately trained in the use of this device. Before attempting to use this device for clinical applications, the operator must read and understand the contents of the user manual and other accompanying documents. Inadequate knowledge or training could result in increased risk of harm to users, patients and bystanders, or damage to the device. Contact Welch Allyn service for additional training options.
- To ensure that electrical safety is maintained during operation from AC (~) power, the device must be plugged into a hospital-grade outlet.
- The power supply cord is the MAINS Disconnect device, please ensure the device is positioned to allow access to the cord in the event disconnection is necessary.
- Only use parts and accessories supplied with the device and/or are available through Welch Allyn, Inc.
- Patient acquisition devices intended for use with the device include series resistance (9 Kohm minimum) in each lead for defibrillation protection. Patient acquisition devices should be checked for cracks or breakage prior to use.
- Conductive parts of the Patient acquisition device, electrodes, and associated connections of type CF applied parts, including the neutral conductor of the Patient acquisition device and electrodes, should not come into contact with other conductive parts including earth ground.
- ECG electrodes could cause skin irritation; patients should be examined for signs of irritation or inflammation.
- To avoid the possibility of serious injury or death during patient defibrillation, do not come into contact with device or Patient acquisition devices. Additionally, proper placement of defibrillator paddles in relation to the electrodes is required to minimize harm to the patient.
- This device does not automatically switch between direct or wireless Patient acquisition devices. Clinician must choose Patient acquisition device before ECG acquisition. If your device is equipped with a receiver for a wireless Patient acquisition device, always make sure that you are receiving data from the expected module.

- This device was designed to use the electrodes specified in this manual. Proper clinical procedure must be employed to prep the electrode sites and to monitor the patient for excessive skin irritation, inflammation, or other adverse reactions. Electrodes are intended for short-term use and should be removed from the patient promptly following testing.

- To avoid potential for spread of disease or infection, single-use disposable components (e.g., electrodes) must not be reused. To maintain safety and effectiveness, electrodes must not be used beyond their expiration date.

- A possible explosion hazard exists. Do not use the device in the presence of a flammable anesthetic mixture.

- Where the integrity of external protective earth conductor arrangement is in doubt, the device shall be operated from its internal electrical power source.

- To improve immunity to potential interfering electromagnetic signals, shielded cabling is recommended when connecting the device to a network.

- Medical devices have been designed to have a higher degree of protection against electric shock than, for instance, information technology equipment because patients often are connected to multiple devices and also may be more prone to the adverse effect of electric currents than healthy persons. All equipment that is connected to the patient, can be touched by the patient, or can be touched by another person while that person touches the patient at the same time, should have the same level of protection against electric shock as medical equipment. The ELI 280 is a medical device that has been designed to be connected to other devices for the purpose of receiving and transmitting data. Certain measures must be taken to prevent the risk of excessive electric current flow through the operator or patient when connected:

    - All electrical equipment that is **not medical electrical equipment** must be placed outside of the "patient environment," defined by applicable safety standards to be at least 1.5 meters (5 feet) from the patient. Alternatively, non-medical equipment may be provided with additional protection such as an additional protective earth connection.

    - All **medical electrical equipment** that has a physical connection to the ELI 280 or the patient, or is in the patient environment must comply with applicable safety standards for medical electrical devices.

    - All electrical equipment that is **not medical electrical equipment** and has a physical connection to the ELI 280 must comply with applicable safety standards, such as IEC 60950 for information technology equipment. This includes information network equipment connected through the LAN connector.

    - Conductive (metal) parts that can be touched by the operator in normal use and that are connected to **non-medical equipment** should not be brought into the patient environment. Examples are connectors for shielded Ethernet or USB cables.

    - If **multiple devices** are connected to each other or to the patient, device chassis and patient leakage currents may be increased, and should be measured for compliance with applicable standards for medical electrical systems.

    - Avoid the use of **portable multiple socket outlets**. If used and not compliant with medical electrical device standards, an additional protective earth connection is required.

    - To prevent electric shock due to unequal ground potentials that may exist between points of a distributed network system or fault conditions in external network connected equipment, network cable shielding (where used) must be connected to protective earth ground appropriate to the area where the device is used.

- The device has not been designed for use with high-frequency (HF) surgical equipment and does not provide a protective means against hazards to the patient.

- When the 40 Hz filter is used, the frequency response requirement for diagnostic ECG equipment cannot be met. The 40 Hz filter significantly reduces high-frequency components of the ECG and pacemaker spike amplitudes, and is recommended only if high-frequency noise cannot be reduced by proper procedures.

- The quality of the signal produced by the device may be adversely affected by the use of other medical equipment, including but not limited to defibrillators and ultrasound machines.

- For proper operation and the safety of users or patients and bystanders, equipment and accessories must be connected only as described in this manual. Do not connect a telephone line cable to the LAN connector.

- Some Welch Allyn electrocardiographs can be equipped with a GPRS (cellular modem) or wireless LAN (WLAN) module for transmitting ECG records. Device labeling and the presence of an antenna port will indicate if your device is equipped with such a module. If so equipped, the following notices apply:

    - The WLAN identification can be found on a label on the bottom of the device.
      B&B electronics1 : Radio Module 9373 with part number WLNN-AN-MR551

      1Manufacturer also called B+B SmartWorx
      (model subject to change without notice)

- Use of the WLAN module may interfere with other equipment operating in the vicinity. Check with local authorities or spectrum management officials in your facility to determine if restrictions apply to the use of this feature in your area.

- Do not transmit via the WLAN module with a missing or damaged antenna. Replace a damaged antenna immediately.

- Use only the antenna supplied for use with this device. Unauthorized antennas, modifications, or attachments could damage the WLAN module and may contravene local RF emission regulations or invalidate type approval.

- To ensure compliance with current regulations limiting both maximum RF output power and human exposure to radio frequency radiation, a separation distance of at least 20 cm must be maintained between the device's antenna and the head and body of the user and any nearby persons at all times. To help prevent degradation of RF signal and to avoid excess RF energy absorption, do not touch the antenna during data transmission.

- The WLAN module complies with applicable RF safety standards including standards and recommendations for the protection of public exposure to RF electromagnetic energy that have been established by governmental bodies and other qualified organizations, such as the following:
    - Federal Communications Commission (FCC)
    - Directives of the European Community
    - Directorate General V in Matters of Radio Frequency Electromagnetic Energy
- This product complies with relevant electro-magnetic interference, mechanical safety, performance, and biocompatibility standards. However, the product cannot completely eliminate potential patient or user harm from the following:
    - Harm or device damage associated with electro-magnetic hazards,
    - Harm from mechanical hazards,
    - Harm from device, function, or parameter unavailability,
    - Harm from misuse error, such as inadequate cleaning, and/or
- The device and IT Network the device is connected to should be securely configured and maintained per the IEC 80001 standard, or an equivalent network security standard or practice.

## Caution(s)

- To prevent possible damage to the touchscreen, do not use sharp objects to touch the screen icons, only use fingertips.
- Do not attempt to clean the device or patient acquisition device by submersing into a liquid, autoclaving, or steam cleaning as this may damage equipment or reduce its usable life. Wipe the exterior surfaces with a warm water and mild detergent solution and then dry with a clean cloth. Use of unspecified cleaning/disinfecting agents, failure to follow recommended procedures, or contact with unspecified materials could result in increased risk of harm to users, patients and bystanders, or damage to the device.
- No user-serviceable parts inside. Screw removal by qualified service personnel only. Damaged or suspected inoperative equipment must be immediately removed from use and must be checked/repaired by qualified service personnel prior to continued use.
- The rechargeable internal battery is a sealed lead-acid type and it is totally maintenance free. If the battery appears to become defective, refer to Welch Allyn Service Department.
- Do not pull or stretch patient acquisition device as this could result in mechanical and/or electrical failures. Patient cables should be stored after forming them into a loose loop.
- Calibration of the display is required before initial operation of the unit. No special equipment is needed for the proper operation or maintenance of the device.
- When necessary, dispose of the device, its components and accessories (e.g., batteries, cables, electrodes), and/or packing materials in accordance with local regulations.
- Proper functioning backup items such as a spare patient cable, front-end device, display monitor, and other equipment are recommended on hand to prevent delayed treatment due to an inoperable device.

## Note(s)

- Patient movement may generate excessive noise that may affect the quality of the ECG traces and the proper analysis performed by the device.
- Proper patient preparation is important to proper application of ECG electrodes and operation of the device.
- The algorithm detecting electrode misplacements is based on normal physiology and ECG lead order, and tries to identify the most likely switch; however, it is advisable to check the other electrode positions in the same group (limb or chest).
- There is no known safety hazard if other equipment, such as pacemakers or other stimulators, is used simultaneously with the device; however, disturbance to the signal may occur.
- The display of a thick baseline while using the WAM wireless acquisition module (square waves on rhythm printout) could be due to the WAM being turned off or having no battery, or the WAM being out of range or experiencing a calibration error. Review the LED indicator on the WAM to ensure the unit is turned on and has proper battery level. Ensure the WAM is paired correctly and is within recommended proximity of the electrocardiograph, and/or power cycle the WAM to re-calibrate. Review the WAM user manual for details.

- The display of a thick baseline while using the AM12 acquisition module (square waves on rhythm printout) could be due to an improper auto-calibration. Reconnect the AM12 or power cycle the electrocardiograph.

- A square wave on the display and rhythm printout could be due to the WAM, the AM12, or lead wires not being connected to the patient.

- As defined by IEC 60601-1 and IEC 60601-2-25, the device is classified as follows:
  - Class I equipment or internally powered.
  - Type CF defibrillation-proof applied parts.
  - Ordinary equipment.
  - Equipment not suitable for use in the presence of a flammable anesthetic mixture.
  - Continuous operation.

  ***NOTE:*** *From a safety perspective, per IEC 60601-1 and derivative standards/norms, this device is declared to be "Class I" and uses a three-prong inlet to ensure an earth connection is made along with mains. The ground terminal on the mains inlet is the only protective earth point in the device. Exposed metal accessible during normal operation is double insulated from mains. Internal connections to earth ground are functional earth.*

- This device is intended to be used in a hospital or doctor's office setting, and should be used and stored according to the environmental conditions specified below:

| | |
|---|---|
| Operating temperature: | +10° to +40°C (+50° to +104°F) |
| Operating humidity: | 10% to 95% RH, non-condensing |
| Storage temperature: | -40° to +70°C (-40° to +158°F) |
| Storage humidity: | 10% to 95% RH, non-condensing |
| Atmospheric pressure: | 500 hPa to 1060 hPa |

- The device will automatically turn off (blank screen) if the batteries have been severely discharged and the AC mains is disconnected from the device.

- After operating the device using battery power, always reconnect the power cord. This ensures that the batteries will be automatically recharged for the next time you use the device. A light next to the on/off switch will illuminate indicating that the device is charging.

- WAM must be paired to electrocardiograph before operation.

- The device must be configured at the factory for use with the WAM.

- The device is UL classified:

CLASSIFIED C UL US
E467322

WITH RESPECT TO ELECTRIC SHOCK,
FIRE AND MECHANICAL HAZARDS ONLY IN ACCORDANCE WITH IEC 60601-1,
CAN/CSA C22.2 No. 60601-1 AND IEC 60601-2-25

## Wireless Data Transmission

- Some Welch Allyn electrocardiographs can be equipped with an optional wireless data transmission module (WLAN or GSM). Both these technologies use radios to transmit data to a Welch Allyn receiving application. Due to the nature of radio transmissions, it's possible that, due to the characteristics of the environment where the device is located, some other RF sources may interfere with the transmission generated by the device. Welch Allyn has tested the coexistence of the device with other devices that can interfere such as devices using WLAN, Bluetooth radio, and/or cell phones. Although the current technology allows a very successful rate of transmission, it's possible that in some rare occurrences, the system may not perform at its best resulting in a "failed transmission". When this occurs, patient data will not be erased from the device nor stored in the receiving application, ensuring that partial or corrupted data are not made available to the receiving station. If the failure mode persists the user should move to a position where the RF signals may propagate better and allow successful transmissions.

## WLAN Option

- Wireless options transmit in the 2.4 GHz or 5 GHz range. Other nearby wireless devices in the same frequency range may cause interference. If possible, move or turn off other devices to minimize potential interference.

- The Wireless LAN module used is compliant with the IEEE 802.11 a, b, g and n standards.

- Access Points used should respect IEEE 802.11 standards as well as local Radio Frequency regulations. The device will scan the available channels and connect to the Access Point on the channel where the SSID that is configured on the device is available.

- The following table shows the radio channels allocated in different geographic areas in the world. For bands 802.11b and g, only channels 1, 6, 11 and 14 (Japan only) are non-overlapping; for band 802-11a, channels shown represent non-overlapping channel numbers.

| Band | Typical Power | Region | Frequency Range (GHz) | No. of channels | Channel numbers |
|---|---|---|---|---|---|
| 802.11b | 15 dBm / 32 mW | USA/Canada | 2.401 - 2.473 | 11 | 1 – 11 |
| | | Europe | 2.401 - 2.483 | 13 | 1 – 13 |
| | | Japan | 2.401 - 2.495 | 14 | 1 – 14 |
| 802.11g | 13 dBm / 18 mW | USA/Canada | 2.401 - 2.473 | 11 | 1 – 11 |
| | | Europe | 2.401 - 2.483 | 13 | 1 – 13 |
| | | Japan | 2.401 - 2.483 | 13 | 1 – 13 |
| 802.11a | 17 dBm / 50 mW | USA/Canada | 5.15 - 5.35, 5.725 - 5.825 | 13 | 36,40,44,48,52,56,60,64,149,153,157, 161,165 |
| | | Europe | 5.15 - 5.35, 5.47 - 5.725 | 19 | 36,40,44,48,52,56,60,64,100,104,108, 112,116,120,124,128,132,136,140 |
| | | Japan | 4.91 – 4.99, 5.15 - 5.35, 5.47 - 5.725 | 23 | 36,40,44,48,52,56,60,64,100,104,108, 112,116,120,124,128,132,136,140,184 188,192,196 |
| | | China | 5.725 - 5.825 | 5 | 149,153,157,161,165 |

- In order to achieve the best transmission rate, it is necessary that the facility where the device is operated can provide good area coverage. Please consult the IT personnel of the facility to verify the proper WLAN availability in the area where the device will be used.

- RF wave propagation may be blocked or reduced by the environment where the device is used. Most common areas where this may occur are: shielded rooms, elevators, underground rooms. In all such situations it is recommended to move the device to a proper location where the WLAN frequencies are available.

# EQUIPMENT SYMBOLS AND MARKINGS

## Symbol Delineation

WARNING The warning statements in this manual identify conditions or practices that could lead to illness, injury, or death. In addition, when used on a patient applied part, this symbol indicates defibrillation protection is in the cables. Warning symbols will appear with a grey background in a black and white document.

CAUTION The caution statements in this manual identify conditions or practices that could result in damage to the equipment or other property, or loss of data

Alternating current

Protective earth symbol (appears on inside of unit)

Fuse symbol (appears on inside of unit)

Telephone line (modem)

Network (LAN)

Universal Serial Bus (USB)

Defibrillator-proof type CF applied part

Input

ON/OFF (power)

Shift key (to enter upper case text on keyboard)

Do not dispose as unsorted municipal waste. Requires separate handling for waste disposal according to local requirements as per 2012/19/EU (WEEE – Waste electrical and electronic equipment).

Antenna

CE 0459

Indicates compliance to applicable European Union directives

| | |
|---|---|
| | Non-ionizing electromagnetic radiation |
| 2 | Version 2 UTK indicator (next to ECG Input) |
| 7d hillrom.com | Follow instructions/directions for use (DFU) -- mandatory action. A copy of the DFU is available on this website. A printed copy of the DFU can be ordered from Hillrom for delivery within 7 calendar days. |
| MD | Medical Device |
| # | Model Identifier |
| REF | Product reference |
| | Manufacturer |
| EC REP | Authorized representative in the European Community |
| SN | Serial Number |
| GTIN | Global Trade Item Number |
| ECG | ECG Patient Cable Input |
| | Australian Communications and Media Authority (ACMA) Radio Compliance Mark (RCM). |

| | |
|---|---|
| | KC Mark (South Korea) |
| | Radio approval symbol for Pakistan |
| | Conatel Approval symbol for Paraguay |
| | Eurasia Certification |
| IP20 | IP rate |
| E467322 | UL approved mark |
| | CE symbol |
| For the State of California: WARNING: Cancer and Reproductive Harm—www.P65Warnings.ca.gov | Verbiage may vary. Background may be yellow if print is not black and white |
| | Do not re-use, Single use device |
| LOT | Lot number |
| | Use by date |
| LATEX | Not made with natural rubber latex |
| Rx ONLY | Prescription only or "For Use by or on the order of a licensed medical professional" |

## Package Symbol Delineation

Keep away from sunlight

This way up

Fragile

Keep dry

Temperature limit

Humidity limitation

Atmospheric pressure limitation

Contains Non-spillable Battery

## Touchscreen Function Control Icons

| | |
|---|---|
| | Patient Information |
| | Initiate Acquisition Of ECG |
| | Initiate Printing Of Continuous Rhythm Strip |
| | Initiate Transmission Of Records |
| | Stop Rhythm Print Out |
| | Configuration (Settings) Menu |
| | Home (returns user to the real-time acquisition screen) |

# GENERAL CARE

## Precautions

- Turn off the device before inspecting or cleaning.
- Do not immerse the device in water.
- Do not use organic solvents, ammonia-based solutions, or abrasive cleaning agents which may damage equipment surfaces.

## Inspection

Inspect your equipment daily prior to operation. If you notice anything that requires repair, contact an authorized service person to make the repairs.

- Verify that all cords and connectors are securely seated.
- Check the case and chassis for any visible damage.
- Inspect cords and connectors for any visible damage.
- Inspect keys and controls for proper function and appearance.

## Cleaning and Disinfecting

### Disinfecting agents

The ELI 280 is compatible with the following disinfectants:

- Clorox Healthcare® Bleach Germicidal Wipes (use according to instructions on product label), or
- a soft, lint-free cloth dampened with a solution of sodium hypochlorite (10% household bleach and water solution) minimum 1:500 dilution (minimum 100 ppm free chlorine) and maximum 1:10 dilution as recommended by the APIC Guidelines for Selection and Use of Disinfectants.

**Caution:** Disinfecting or cleaning agents that contain Quaternary Ammonium Compounds (Ammonium Chlorides) have been identified as having negative effects if used to disinfect the product. Use of such agents may result in discoloration, cracking, and deterioration of the external housing of the device.

## Cleaning

To clean the ELI 280:

1. Disconnect the power source.
2. Remove cables and lead wires from device before cleaning.
3. Thoroughly wipe the surface of the ELI 280 with a clean, lint-free cloth dampened with a mild detergent and water for general cleaning or use one of the above recommended agents for disinfection.
4. Dry the device with a clean, soft, dry, lint-free cloth.

***WARNING***:

Prevent liquid from penetrating the device and do not attempt to clean/disinfect the device or patient cables by submerging into a liquid, autoclaving, or steam cleaning.

Do not expose cables to strong ultra-violet radiation.

Do not sterilize the device or lead wires with Ethylene Oxide (EtO) gas.

Do not immerse cable ends or lead wires; immersion can cause metal corrosion. Use caution with excess liquid as contact with metal parts may cause corrosion.

Do not use excessive drying techniques such as forced heat.

Improper cleaning products and processes can damage the device, produce brittle lead wires and cables, corrode the metal, and void the warranty. Use care and proper procedure whenever cleaning or maintaining the device.

## Disposal

Disposal must be in accordance with the following steps:

1. Follow cleaning and disinfection instructions per instructions in this user manual section.
2. Delete all existing data related to patients/hospital/clinic/doctor. Data backup may be performed prior to deletion.
3. Segregate material in preparation for the recycling process
    - Components are to be disassembled and recycled based on type of material
        - Plastic to be recycled as plastic waste
        - Metal to be recycled as Metals
            - Includes loose components containing more than 90% metal by weight
            - Includes screws and fasteners
        - Electronic components, including the power cord, to be disassembled and recycled as Waste of Electrical and Electronic Equipment (WEEE)
        - Batteries to be dismantled from the device and properly disposed according with Battery directive.

Users must adhere to all federal, state, regional, and/or local laws and regulations as it pertains to the safe disposal of medical devices and accessories. If in doubt, the user of the device shall first contact Hillrom Technical Support for guidance on safe disposal protocols.

Waste of Electrical and
Electronic Equipment (WEEE)

# ELECTROMAGNETIC COMPATIBILITY (EMC)

## EMC Compliance

Special precautions concerning electromagnetic compatibility (EMC) must be taken for all medical electrical equipment.

- All medical electrical equipment must be installed and put into service in accordance with the EMC information provided in this *User Manual.*
- Portable and mobile RF communications equipment can affect the behavior of medical electrical equipment.

The device complies with all applicable and required standards for electromagnetic interference.

- It does not normally affect nearby equipment and devices.
- It is not normally affected by nearby equipment and devices.
- It is not safe to operate the device in the presence of high-frequency surgical equipment.
- However, it is good practice to avoid using the device in extremely close proximity to other equipment.

**WARNING** Avoid using the device adjacent to or stacked with other equipment or medical electrical systems because it could result in improper operation. If such use is necessary, observe the device and other equipment to verify that they are operating normally.

**WARNING** Use only accessories recommended by Welch Allyn for use with the device. Accessories not recommended by Welch Allyn might affect the EMC emissions or immunity.

**WARNING** Maintain minimum separation distance between the device and portable RF communication equipment. Device performance might degrade if you do not maintain a proper distance between equipment.

This device complies to IEC 60601-1-2:2014 (EMC international standard, 4th Edition). Refer to the proper Guidance and Manufacturer's Declaration and Recommended Separation Distance tables based on which standard the device meets.

## Guidance and Manufacturer's Declaration: Electromagnetic Emissions

The equipment is intended for use in the electromagnetic environment specified in the table below. The customer or the user of the equipment should ensure that it is used in such an environment.

| Emissions Test | Compliance | Electromagnetic Environment: Guidance |
|---|---|---|
| RF Emissions<br>CISPR 11 | Group 1 | The device uses RF energy only for its internal function. Therefore, its RF emissions are very low and not likely to cause any interference in nearby electronic equipment. |
| RF Emissions<br>CISPR 11 | Class A | The device is suitable for use in all establishments other than domestic, and may be used in domestic establishments and those directly connected to the public low-voltage power supply network that supplies buildings used for domestic purposes, provide the following warning is heeded:<br>**Warning:** This equipment/system is intended for use by healthcare professionals only. This equipment/system may cause radio interference or may disrupt the operation of nearby equipment. It may be necessary to take mitigation measures, such as re-orienting or relocating the device or shielding the location. |
| Harmonic Emissions<br>IEC 61000-3-2 | Class A | |
| Voltage Fluctuations/<br>Flicker Emissions<br>IEC 61000-3-3 | Complies | |

The device may contain a 5-GHz orthogonal frequency-division multiplexing transmitter or a 2.4-GHz frequency hopping spread-spectrum transmitter for the purpose of wireless communication. The radio is operated according to the requirements of various agencies, including FCC 47 CFR 15.247 and EU Radio Emitting Device Directive. Since the radio complies with the applicable national radio regulations, per requirements of 60601-1-2 the radio module portion of the device is exempt from testing to the device CISPR electromagnetic disturbance requirements. The energy radiated from the radio should be considered when addressing possible interference issues between this and other devices

## Guidance and Manufacturer's Declaration: Electromagnetic Immunity

The equipment is intended for use in the electromagnetic environment specified in the table below. The customer or the user of the equipment should ensure that it is used in such an environment.

| Immunity Test | IEC 60601 Test Level | Compliance Level | Electromagnetic Environment: Guidance |
|---|---|---|---|
| Electrostatic discharge (ESD) EN 61000-4-2 | +/- 8 kV contact<br>+/- 15 kV air | +/- 8 kV contact<br>+/- 15 kV air | Floors should be wood, concrete, or ceramic tile. If floors are covered with synthetic material, the relative humidity should be at least 30%. |
| Electrical fast transient/burst EN 61000-4-4 | +/- 2 kV for power supply lines<br>+/- 1 kV for input/output lines | +/- 2 kV for power supply lines<br>+/- 1 kV for input/output lines | Mains power quality should be that of a typical commercial or hospital environment. |
| Surge IEC 61000-4-5 | +/- 1 kV differential mode<br>+/- 2 kV common mode | +/- 1 kV differential mode<br>+/- 2 kV common mode | Mains power quality should be that of a typical commercial or hospital environment. |
| Voltage dips, short interruptions, and voltage variations on power supply input lines IEC 61000-4-11 | 0 % UT; 0.5 cycle At 0°, 45°, 90°, 135°, 180°, 225°, 270° and 315°<br><br>0 % UT; 1 cycle and 70 % UT; 25/30 cycles for 50 Hz and 60 Hz respectively Single phase: at 0°<br><br>0 % UT; 250/300 cycle for 50 Hz and 60 Hz respectively | 0 % UT; 0.5 cycle At 0°, 45°, 90°, 135°, 180°, 225°, 270° and 315°<br><br>0 % UT; 1 cycle and 70 % UT; 25/30 cycles for 50 Hz and 60 Hz respectively Single phase: at 0°<br><br>0 % UT; 250/300 cycle for 50 Hz and 60 Hz respectively | Mains power quality should be that of a typical commercial or hospital environment. If the user of the device requires continued operation during power mains interruptions, it is recommended that the device be powered from an uninterruptible power supply or a battery. |
| Power frequency (50/60 Hz) magnetic field IEC 61000-4-8 | 30 A/m | 30 A/m | Power frequency magnetic fields should be at levels characteristic of a typical location in a typical commercial or hospital environment. |

***NOTE:*** *UT is the AC Mains voltage prior to application of the test level.*

## Guidance and Manufacturer's Declaration: Electromagnetic Immunity

The equipment is intended for use in the electromagnetic environment specified in the table below. The customer or the user of the equipment should ensure that it is used in such an environment.

| Immunity Test | IEC 60601 Test Level | Compliance Level | Electromagnetic Environment: Guidance |
|---|---|---|---|
| Conducted RF<br>EN 61000-4-6 | 3 Vrms<br>150 kHz to<br>80 MHz<br><br>6 Vrms in ISM bands between 150 kHz and 80 MHz | 3 Vrms<br>150 kHz to<br>80 MHz<br><br>6 Vrms in ISM bands between 150 kHz and 80 MHz | Portable and mobile RF communications equipment should be used no closer to any part of the equipment, including cables, than the recommended separation distance calculated from the equation applicable to the frequency of the transmitter.<br><br>**Recommended separation distance**<br><br>$d = \left[\frac{3.5}{3Vrms}\right]\sqrt{P}$ 150 kHz to 80 MHz<br><br>$d = \left[\frac{3.5}{3V/m}\right]\sqrt{P}$ 80 MHz to 800 MHz<br><br>$d = \left[\frac{7}{3V/m}\right]\sqrt{P}$ 800 MHz to 2.7 GHz |
| Radiated RF<br>IEC 61000-4-3<br><br>Proximity fields from RF wireless communications equipment<br>IEC 61000-4-3 | 3 V/m<br>80 MHz to<br>2.7 GHz<br><br>9 V/m to 28 V/m<br>15 specific frequencies, 385 MHz to 5.785 GHz | 3 V/m<br>80 MHz to<br>2.7 GHz<br><br>9 V/m to 28 V/m<br>15 specific frequencies, 385 MHz to 5.785 GHz | Where *P* is the maximum output power rating of the transmitter in watts (W) according to the transmitter manufacturer and *d* is the recommended separation distance in meters (m).<br><br>Field strengths from fixed RF transmitters, as determined by an electromagnetic site survey[a], should be less than the compliance level in each frequency range[b].<br><br>Interference may occur in the vicinity of equipment marked with the following symbol:<br><br> |

a. Field strengths from fixed transmitters, such as base stations for radio (cellular/cordless) telephones and land mobile radios, amateur radios, AM and FM radio broadcast, and TV broadcast cannot be predicted theoretically with accuracy. To assess the electromagnetic environment due to fixed RF transmitters, an electromagnetic site survey should be considered. If the measured field strength in the location in which the equipment is used exceeds the applicable RF compliance level above, the equipment should be observed to verify normal operation. If abnormal performance is observed, additional measures may be necessary, such as reorienting or relocating the equipment.

b. Over the frequency range 150 kHz to 80 MHz, field strengths should be less than 3 V/m.

## Recommended Separation Distances Between Portable and Mobile RF Communications Equipment and the Equipment

The equipment is intended for use in the electromagnetic environment in which radiated RF disturbances are controlled. The customer or the user of the equipment can help to prevent electromagnetic interference by maintaining a minimum distance between portable and mobile RF communications equipment (transmitters) and the equipment as recommended in the table below, according to the maximum output power of the communications equipment.

| Rated Maximum Output Power of Transmitter W | Separation Distance According to Frequency of Transmitter (m) | |
|---|---|---|
| | 150 KHz to 800 MHz | 800 MHz to 2.5 GHz |
| | $d = 1.2\sqrt{P}$ | $d = 2.3\sqrt{P}$ |
| 0.01 | 0.1 m | 0.2 m |
| 0.1 | 0.4 m | 0.7 m |
| 1 | 1.2 m | 2.3 m |
| 10 | 4.0 m | 7.0 m |
| 100 | 12.0 m | 23.0 m |

For transmitters rated at a maximum output power not listed above, the recommended separation distance *d* in meters (m) can be estimated using the equation applicable to the frequency of the transmitter, where *P* is the maximum output power rating of the transmitter in watts (W) according to the transmitter manufacturer.

***NOTE 1:*** *At 800 MHz, the separation distance for the higher frequency range applies.*

***NOTE 2:*** *These guidelines may not apply in all situations. Electromagnetic propagation is affected by the absorption and reflection from structures, objects, and people.*

# Regulatory Radio Compliance

## Federal Communications Commission (FCC)

This device complies with part 15 of the FCC Rules. Operation is subject to the following two conditions:

- This device may not cause harmful interference.
- This device must accept any interference received, including interference that may cause undesired operation.

This equipment has been tested and found to comply with the limits for a Class B digital device, pursuant to Part 15 of FCC Rules. These limits are designed to provide reasonable protection against harmful interference in a residential installation. This equipment generates, uses, and can radiate radio frequency energy. If not installed and used in accordance with the instructions, it may cause harmful interference to radio communications. However, there is no guarantee that interference will not occur in a particular installation. If this equipment does cause harmful interference to radio or television reception, which can be determined by turning the equipment off and on, the user is encouraged to try and correct the interference by one or more of the following measures:

1. Reorient or relocate the receiving antenna
2. Increase the distance between the equipment and the receiver
3. Connect the equipment to an outlet on a circuit different from that to which the receiver is connected
4. Consult the dealer or an experienced radio/TV technician for help

The user may find the following booklet prepared by the Federal Communications Commission helpful: The Interference Handbook This booklet is available from the U.S. Government Printing Office, Washington, D.C. 20402. Stock No. 004-000-0034504. Welch Allyn is not responsible for any radio or television interference caused by unauthorized modification of the devices included with this Welch Allyn product, or the substitution or attachment of connecting cables and equipment other than specified by Welch Allyn. The correction of interference caused by such unauthorized modification, substitution, or attachment will be the responsibility of the user.

**WLAN**

B&B electronics[1] : Radio Module 9373 with part number WLNN-AN-MR551
FCC ID: F4AWLNN551

[1]Manufacturer also called B+B SmartWorx

## Industry Canada (IC) Emissions

### *RF Radiation Hazard Warning*

Using higher gain antennas and types of antennas not certified for use with this product is not allowed. The device shall not be co-located with another transmitter.

Cet avertissement de sécurité est conforme aux limites d'exposition définies par la norme CNR-102 at relative aux fréquences radio.

This device complies with RSS 210 of Industry Canada.

Operation is subject to the following two conditions: (1) this device may not cause interference, and (2) this device must accept any interference, including interference that may cause undesired operation of this device.

L'utilisation de ce dispositif est autorisée seulement aux conditions suivantes: (1) il ne doit pas produire de brouillage et (2) l' utilisateur du dispositif doit étre prêt à accepter tout brouillage radioélectrique reçu, même si ce brouillage est susceptible de compromettre le fonctionnement du dispositif.

This Class B digital apparatus complies with Canadian ICES-003.

Cet appareil numérique de la classe B est conform à la norme NMB-003 du Canada.

**WLAN**

B&B electronics[1] : Radio Module 9373 with part number WLNN-AN-MR551
IC: 3913A-WLNN551
[1]Manufacturer also called B+B SmartWorx

### Declaración de conformidad Mexico

La operación de este equipo está sujeta a las siguientes dos condiciones:

1. es posible que este equipo o dispositivo no cause interferencia perjudicial y
2. este equipo o dispositivo debe aceptar cualquier interferencia, incluyendo la que pueda causar su operación no deseada.

**European Union**

| | |
|---|---|
| Czech | Welch Allyn tímto prohlašuje, ze tento WLAN device je ve shodě se základními požadavky a dalšími příslušnými ustanoveními směrnice 2014/53/ES. |
| Danish | Undertegnede Welch Allyn erklærer herved, at følgende udstyr WLAN device overholder de væsentlige krav og øvrige relevante krav i direktiv 2014/53/EF |
| Dutch | Bij deze verklaart Welch Allyn dat deze WLAN device voldoet aan de essentiële eisen en aan de overige relevante bepalingen van Richtlijn 2014/53/EC. |
| English | Hereby, Welch Allyn, declares that this WLAN device is in compliance with the essential requirements and other relevant provisions of Directive 2014/53/EC. |
| Estonian | Käesolevaga kinnitab Welch Allyn seadme WLAN device vastavust direktiivi 2014/53/EÜ põhinõuetele ja nimetatud direktiivist tulenevatele teistele asjakohastele sätetele. |
| Finnish | Welch Allyn vakuuttaa täten että WLAN device tyyppinen laite on direktiivin 2014/53/EY oleellisten vaatimusten ja sitä koskevien direktiivin muiden ehtojen mukainen. |
| French | Par la présente, Welch Allyn déclare que ce WLAN device est conforme aux exigences essentielles et aux autres dispositions de la directive 2014/53/CE qui lui sont applicables |
| German | Hiermit erklärt Welch Allyn die Übereinstimmung des Gerätes WLAN device mit den grundlegenden Anforderungen und den anderen relevanten Festlegungen der Richtlinie 2014/53/EG. (Wien) |
| Greek | ΜΕ ΤΗΝ ΠΑΡΟΥΣΑ Welch Allyn ΔΗΛΩΝΕΙ ΟΤΙ WLAN device ΣΥΜΜΟΡΦΩΝΕΤΑΙ ΠΡΟΣ ΤΙΣ ΟΥΣΙΩΔΕΙΣ ΑΠΑΙΤΗΣΕΙΣ ΚΑΙ ΤΙΣ ΛΟΙΠΕΣ ΣΧΕΤΙΚΕΣ ΔΙΑΤΑΞΕΙΣ ΤΗΣ ΟΔΗΓΙΑΣ 2014/53/ΕΚ |
| Hungarian | Alulírott, Welch Allyn nyilatkozom, hogy a WLAN device megfelel a vonatkozó alapvetõ követelményeknek és az 2014/53/EC irányelv egyéb elõírásainak. |
| Italian | Con la presente Welch Allyn dichiara che questo WLAN device è conforme ai requisiti essenziali ed alle altre disposizioni pertinenti stabilite dalla direttiva 2014/53/CE. |
| Latvian | Ar šo Welch Allyn deklarē, ka WLAN device atbilst Direktīvas 2014/53/EK būtiskajām prasībām un citiem ar to saistītajiem noteikumiem. |
| Lithuanian | Šiuo Welch Allyn deklaruoja, kad šis WLAN device atitinka esminius reikalavimus ir kitas 2014/53/EB Direktyvos nuostatas. |
| Malti | Hawnhekk, Welch Allyn, jiddikjara li dan WLAN device jikkonforma mal-htigijiet essenzjali u ma provvedimenti ohrajn relevanti li hemm fid-Dirrettiva 2014/53/EC |
| Portuguese | Welch Allyn declara que este WLAN device está conforme com os requisitos essenciais e outras disposições da Directiva 2014/53/CE. |
| Slovak | Welch Allyn týmto vyhlasuje, ze WLAN device splňa základné požiadavky a všetky príslušné ustanovenia Smernice 2014/53/ES. |
| Slovene | Šiuo Welch Allyn deklaruoja, kad šis WLAN device atitinka esminius reikalavimus ir kitas 2014/53/EB Direktyvos nuostatas. |
| Spanish | Por medio de la presente Welch Allyn declara que el WLAN device cumple con los requisitos esenciales y cualesquiera otras disposiciones aplicables o exigibles de la Directiva 2014/53/CE |
| Swedish | Härmed intygar Welch Allyn att denna WLAN device står I överensstämmelse med de väsentliga egenskapskrav och övriga relevanta bestämmelser som framgår av direktiv 2014/53/EG. |

## Radio Compliance Table:

| | | | |
|---|---|---|---|
| Argentina | Ente Nacional de las Comunicaciones (ENACOM) | CNC COMISIÓN NACIONAL DE COMUNICACIONES<br>C-22663 (B&B) | |
| Australia | Australian Communications and Media Authority (ACMA) Radio Compliance Mark (RCM). | | |
| Brazil | Agência Nacional de Telecomunicações (ANATEL) | ANATEL<br>Modelo: B&B 02432-19-10488 | Este produto contém a placa 9373 código de homologação ANATEL B&B: 02432-19-10488.<br>Este equipamento não tem direito à proteção contra interferência prejudicial e não pode causar interferência em sistemas devidamente autorizados |
| EAC | | EAC | Products meet all requirements of the corresponding technical regulations and have passed all conformity assessment procedures. |
| Indonesia | | Keterangan<br>a. [61733/I/SDPPI/2019] (B&B) adalah nomor sertifikat yang diterbitkan untuk setiap alat dan perangkat telekomunikasi<br>b. [8620] (B&B) adalah nomor PLG ID (identitas pelanggan) berdasarkan database Lembaga Sertifikasi | Identification<br>a. [61733/I/SDPPI/2019] (B&B) is a number of certificate issued for certified telecommunication equipment<br>b. [8620] (B&B) is a number of PLG ID based on one Certification Body database |
| Mexico | Instituto Federal de Telecomunicaciones (Federal Telecommunications Institute—IFETEL) | This product contains and Approved module, Model No. 9373, IFETEL No. RCPBB9319-0533 (**B&B**) | |
| Morocco | | | AUTHORIZED BY MOROCCO ANRT<br>***B&B***: *Approval number:* MR 17490 ANRT 2018<br>*Date of approval*: 13-SEP-2018 |
| Oman | Telecommunications Regulatory Authority | | B&B R/6162/18<br>D172249 |
| Paraguay | Comisión Nacional de Telecomunicaciones | CONATEL | NR: 125/2019 |
| Pakistan | Pakistan Telecom Authority | Approved by PTA 2019 PTA Pakistan Telecom Authority | |

| | | |
|---|---|---|
| Philippines | National Telecommunications Commission | **B&B**: ESD - 1818097C |
| Singapore | Info-Communications Media Development Authority (IMDA) | Complies with IMDA Standards [ DA105282 ] |
| South Korea | Korea Communications Commission (대한민 국 방송통 신위원 회) – KCC<br>Certification number:<br>**B&B**: R-C-BVT-9373 | This equipment is Industrial (Class A) electromagnetic wave suitability equipment and seller or user should take notice of it, and this equipment is to be used in the places except for home.<br>이기기는업무용(A급) 전자파적합기기로서 판매자 또는 사용자는 이 점을 주의하시기 바라 며, 가정외의지역에서사용하는것을 목적으로합니다.<br><br>Class A Equipment (Industrial Broadcasting & Communication Equipment)<br>A급기기(업무용방 송통신기자재) |
| UAE | | **B&B** ER65768/18 |

# INTRODUCTION

## Manual Purpose

This manual is intended to provide the user with information about:

- Using and understanding the ELI™ 280 electrocardiograph, the touchscreen display, and the function control icons.
- Preparing the ELI 280 for use.
- Acquiring, printing, and storing an ECG.
- Connectivity and transmitting ECGs.
- Maintaining the ECG directory.
- System settings.
- Maintenance and troubleshooting.

***NOTE**: This manual may contain screen shots. Any screen shots are provided for reference only. Consult the actual screen in the host language for specific wording.*

## Audience

This manual is written for clinical professionals with a working knowledge of medical procedures and terminology as required for monitoring cardiac patients.

## Intended Use (Functional Purpose)

The ELI 280 is intended to be a high-performance, 12-lead, multifunctional electrocardiograph. As a resting electrocardiograph, ELI 280 simultaneously acquires data from 12 leads. Once the data is acquired, it can be reviewed and/or stored, and/or printed. It is a device primarily intended for use in hospitals but may be used in medical clinics and offices of any size.

## Indications for Use

- Device is indicated for use to acquire, analyze, display, and print electrocardiograms.
- Device is indicated for use to provide interpretation of the data for consideration by a physician.
- Device is indicated for use in a clinical setting, by a physician or by trained personnel who are acting on the orders of a licensed physician. It is not intended as a sole means of diagnosis.
- The interpretations of ECG offered by the device are only significant when used in conjunction with a physician over-read as well as consideration of all other relevant patient data.
- Device is indicated for use on adult and pediatric populations.
- The device is not intended to be used as a vital signs physiological monitor.

## System Description

The ELI 280 is able to acquire, analyze, display and print electrocardiograms acquired through its internal front-end amplifier. The size of the screen will allow preview of the record for technician to assess the quality of the acquired ECG.
The ELI 280 utilizes a color touch screen LCD screen for display of ECG waveforms, menu options and status information. A custom keyboard is part of the ELI 280 design and allows patient data entry as well as control of the functions and options available for the unit. The touch screen overlay on the LCD display allows the user to interact with the cardiograph by touching areas on the screen for select functions, input demographic parameters and navigate through menus using the touch screen interface.

The device is optionally equipped with Welch Allyn's VERITAS™ resting ECG interpretation algorithm with age and gender specific criteria. If this option is enabled the VERITAS algorithm can provide an over-reading physician with a silent second opinion through diagnostic statements output on the ECG report. For additional information on the VERITAS algorithm, please refer to the *Physician's Guide to VERITAS with Adult and Pediatric Resting ECG Interpretation*.

The device can also be configured with expanded memory, bidirectional connectivity, and DICOM® protocol support, and operates on battery or line power.

Supported print formats for the ELI 280 include: standard or Cabrera 3+1, 3+3, 6, 6+6, or 12 channel in automatic mode; 3, 6, or 12 channel rhythm strip printing.

During rhythm strip printing the user can toggle between the various channels (default leads, limb and chest leads, etc.). To begin or resume a suspended rhythm strip print, press

from the touchscreen display. To suspend or end a rhythm strip print, press

from the touchscreen display.

The device includes:

- WAM™ or AM12™ acquisition module with lead wire set
- Hospital-grade power cord
- Antenna (with WLAN option)
- 1 pack paper (standard or A4)
- Physician's Guide to VERITAS with Adult and Pediatric Resting ECG Interpretation
- User manual CD
- Accessory starter kit

## System Illustration

**Figure 1-1**

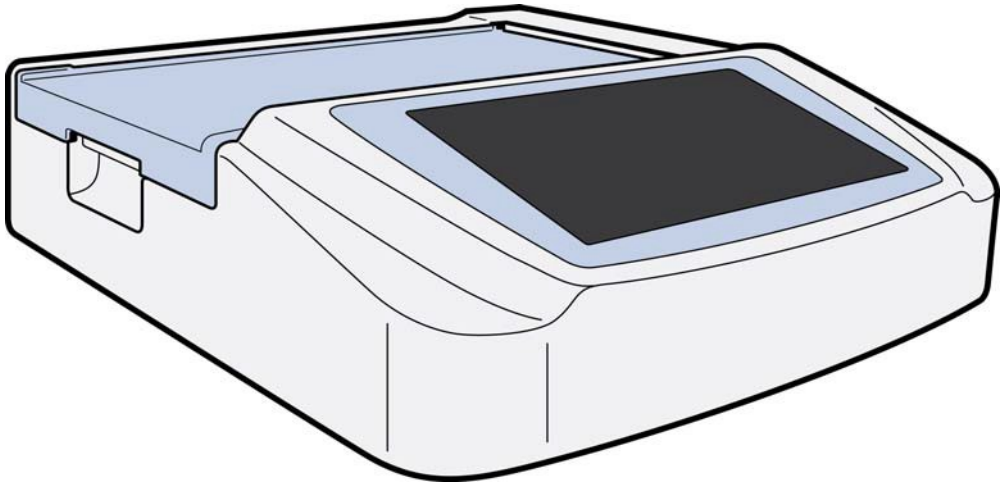

## Side View

**Figure 1-2**

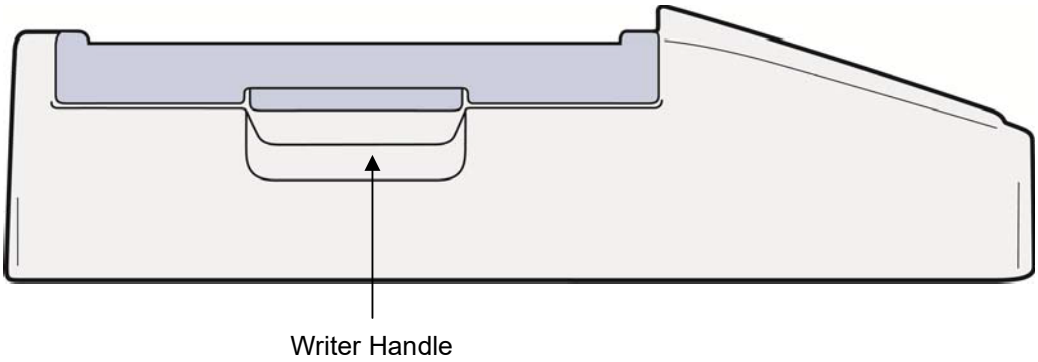

## Rear View

**Figure 1-3**

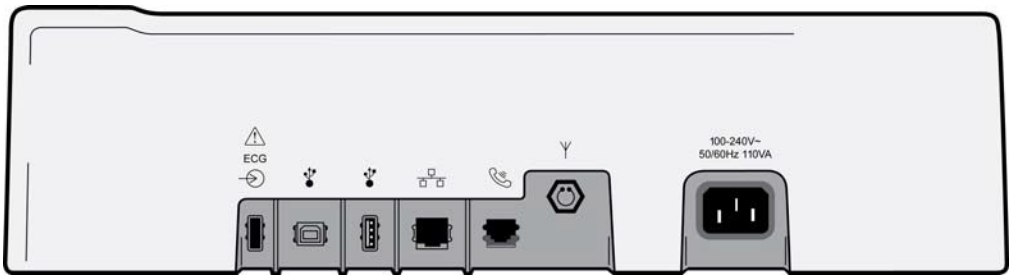


**1 2 3 4 5 6 7**

1 AM12 ECG connector port
2 USB device port
3 USB connector port
4 RJ45 LAN connector port
5 Modem port
6 WLAN antenna connector
7 100 – 240V power

## Base View

**Figure 1-4**

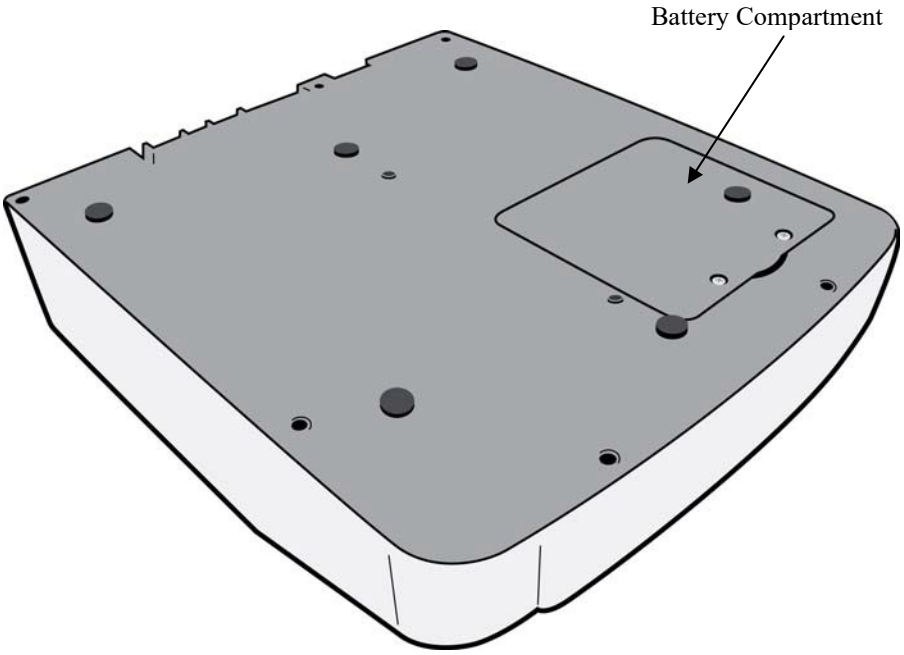

## Display Overview

The ELI 280 features a 10.1” diagonal LCD color display to preview the ECG waveform and other parameters as explained below. During ECG acquisition, notification messages will also appear on the display.

**Figure 1-5**

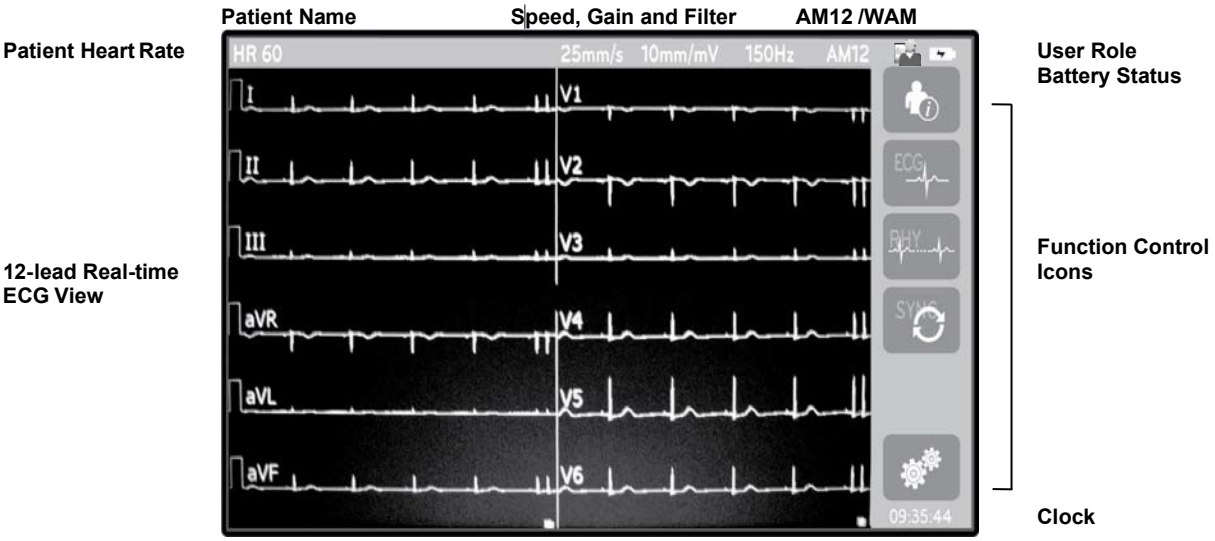


## Display Parameters

### Patient Heart Rate (HR):

When a patient is connected to the device, the HR displays in real time in the upper left corner.

> ***NOTE:*** *If a lead fail occurs, an indicator flashes in the center of the display and the HR number displays dashes until the lead failure is corrected.*

### Patient Demographics:

The patients first and last name will be presented in the upper left corner of the display.

### Display Speed/ECG Gain/ECG Filter:

The current settings for sweep speed, ECG gain, and ECG filter display along the top center.

### WAM/AM12:

The acquisition module currently in use will be presented in the upper right corner of the display.

> ***WARNING:*** *If your device is equipped with a receiver for a Wireless Acquisition Module, always make sure that you are receiving data from the expected module.*

### User Role:
An icon indicating the role of the authenticated user.

**Anonymous Guest** – the user has not been authenticated. The unknown guest may only acquire new ECGs by manual entry of patient demographics. Their User Name will not be prepopulated into the Technician field of new ECGs.

**Known Guest** – the user has been authenticated on the network with their User Name and Password, but the user has not been granted Technician or Administrator permissions. The user may only acquire new ECGs by manual entry of patient demographics. Their User Name will be prepopulated into the Technician field of new ECGs.

**Technician** – the user has been authenticated on the network with their User Name and Password, and the user has been granted Technician permissions. In addition to Guest permissions, this user may also view orders and stored ECGs.

**Administrator** – the user has been authenticated on the network with their User Name and Password, and the user has been granted Administrator permissions. In addition to Technician permissions, this user may also change the ELI 280's settings.

### Battery Indicator:
An icon indicating battery charge status displays in the upper right corner.

### Clock:
The digital clock located in the lower right corner displays hour, minutes and seconds. The time appearing on the ECG printout is the time the ECG was acquired.

## Function Control Icons

Use the touchscreen Function Control icons to complete patient and/or ECG functions, as well as access the Configuration menu.

**Patient Information, Orders, or Modality Work List (MWL)**
Press this icon to manually enter patient demographics or use either a work list directory or common directory to find and download patient information.

**ECG Acquisition**
Press this icon to display the ECG in one of several formats: 12x1, 4x2, 6x2, and any three selected leads (i.e. II-V1-V5). The on-screen ECG report displays patient name, date and time, Last or Best 10 and the filter setting. Additional interpretive information is available by pressing the arrow soft keys to the right of the display. Additional utilities from this screen include printing or sending the ECG report, returning to the real-time display, advancing to the next patient, deleting the test results, and returning to the previous screen.

**Rhythm Printing**
Press this icon to start or resume a rhythm print.

**Transmit and/or Download Order List; Time Sync**
Press this icon to synchronize communication between the ELI 280 and a cardiology management system. Once synchronized, the Sync icon can be used to receive orders, transmit reports, synchronize time/date, or any combination thereof. The ELI 280 will synchronize only with certain versions of ELI Link and/or an E-Scribe™ data management system.

***NOTE:*** *This device supports automatic time synchronization with a remote server. Inaccurate time/date settings can result in ECGs marked with inaccurate time stamps. Confirm the accuracy of the synchronized time prior to acquiring ECGs.*

**Configuration menu (Settings)**
Pressing this icon allows the administrator to configure the system's display and ECG acquisition format along with other global settings. These configuration settings become the default setting at power up and for each ECG test unless customized for an individual patient.

***NOTE:*** *If a format change has been made during a specific test the ELI 280 will return to its default setting for the next patient.*

**Stop**
Press this icon to stop or suspend a rhythm print, or stop a function.

**Home**
Press this icon to return to the real-time acquisition display.

## Specifications

| Feature | Specifications |
|---|---|
| Instrument Type | Multi-lead electrocardiograph |
| Input Channels | Simultaneous acquisition of all 12 leads |
| Standard Leads Acquired | I, II, III, aVR, aVL, aVF, V1, V2, V3, V4, V5, V6 |
| Waveform Display | Backlit, 10.1” high-resolution color LCD |
| Input Impedance<br>Input Dynamic Range<br>Electrode Offset Tolerance<br>Common Mode Rejection<br>Pacemaker Pulse Display | Meets or exceeds the requirements of ANSI/AAMI/ IEC 60601-2-25 |
| Patient Leakage Current<br>Chassis Leakage Current | Meets or exceeds the requirements of ANSI/AAMI ES1 |
| Digital Sampling Rate | 40,000 s/sec/channel used for pacemaker spike detection;<br>1000 s/sec/channel used for recording and analysis |
| Optional Functions | Welch Allyn VERITAS resting ECG interpretation algorithm with age and gender specific criteria; connectivity with bidirectional |
| Paper | Perforated Z-fold thermal paper, Smart, A4 or 8.5 x 11” wide, 250 sheets |
| Thermal Printer | Computer-controlled dot array; 1 dot/ms horizontal, 8 dots/mm vertical |
| Thermal Printer Speeds | 5, 10, 25, or 50 mm/s |
| Gain Settings | 5, 10, or 20 mm/mV |
| Report Print Formats | Standard or Cabrera: 3+1, 3+3, 6, 6+6, or 12 channel |
| Rhythm Print Formats | 3, 6, 8 or 12 channel with configurable lead groups |
| Frequency Response | 0.05 to 300 Hz |
| Filters | High-performance baseline filter; AC interference filter 50/60 Hz; low-pass filters 40 Hz, 150 Hz, or 300 Hz |
| A/D Conversion | 20 bits (1.17 microvolt LSB) |
| Device Classification | Class I, Type CF defibrillation-proof applied parts |
| ECG Storage | Internal storage up to 40 ECGs; optional expanded up to 200 ECGs |
| Weight | 12.5 lbs. (5.68 kg) including battery (without paper) |
| Dimensions | 17.5 x 15.5 x 4.5” (44.45 x 39.37 x 11.43 cm) |
| Power Requirements | Universal AC power supply (100-240 VAC at 50/60 Hz) 110 VA; internal rechargeable battery |
| Battery | Rechargeable sealed lead-acid (SLA) 12V battery; rated 7 Ah at 20 hours; 5.94” x 2.56” x 3.86” (151 x 65 x 98 mm); weighs 2.65 lbs. (1.2 kg) |

## AM12 / AM12M Specifications

| Feature | Specification* |
|---|---|
| Instrument Type | 12-lead ECG acquisition module |
| Input Channels | 12-lead signal acquisition |
| ECG Leads Output | I, II, III, aVR, aVL, aVF, V1, V2, V3, V4, V5, and V6 |
| Trunk Cable Length | Approximately 10 feet (3 meters) |
| AM12 Lead Set | RA, LA, RL, LL, V1, V2, V3, V4, V5, and V6 (R, L, N, F, C1, C2, C3, C4, C5, and C6) with detachable lead wires |
| AM12M Connector | DB15 type connector for ECG patient cable connection |
| Sampling Rate | 40,000 samples/second/channel acquisition; 1,000 samples/second/channel transmitted for analysis |
| Resolution | 1.17µV reduced to 2.5µV for analysis |
| User Interface | 12-lead ECG and rhythm strip buttons at the acquisition module |
| Defibrillator Protection | Complies with AAMI standards and IEC 60601-2-25 |
| Device Classification | Type CF, Defibrillator Proof |
| Weight | 12 oz. (340 g) |
| Dimensions | 4.72 x 4.3 x .98” (12 x 11 x 2.5 cm) |
| Power | Powered by USB connection to the ELI 280 |

* Specifications subject to change without notice.

**WAM / UTK**

Radio specifications and certification information for the Wireless Acquisition Module (WAM) and USB Transceiver Key (UTK), can be found in the WAM user manual.

## Accessories

### Replacement Lead sets and Accessories

| Part Number | Description |
|---|---|
| 9293-046-07 | Lead wire combiner for WAM LEADS 10 POS IEC AHA GRAY |
| 9293-046-60 | LEAD SET WAM 10 WIRE BANANA AHA GRAY |
| 9293-046-61 | LEAD SET WAM 10 WIRE BANANA IEC GRAY |
| 9293-046-62 | RPLCE LD SET WAM/AM12 LIMBS BANA AHA GRY |
| 9293-046-63 | RPLCE LD SET WAM/AM12 LIMBS BANA IEC GRY |
| 9293-046-64 | RPLCE LD SET WAM/AM12 V1-V3 BANA AHA GRY |
| 9293-046-65 | RPLCE LD SET WAM/AM12 C1-C3 BANA IEC GRY |
| 9293-046-66 | RPLCE LD SET WAM/AM12 V4-V6 BANA AHA GRY |
| 9293-046-67 | RPLCE LD SET WAM/AM12 C4-C6 BANA IEC GRY |
| 9293-047-60 | LEAD SET WAM 10 WIRE CLIPS AHA GRAY |
| 9293-047-61 | LEAD SET WAM 10 WIRE CLIPS IEC GRAY |

| | |
|---|---|
| 9293-047-62 | RPLCE LD SET WAM/AM12 LIMBS CLIP AHA GRY |
| 9293-047-63 | RPLCE LD SET WAM/AM12 LIMBS CLIP IEC GRY |
| 9293-047-64 | RPLCE LD SET WAM/AM12 V1-V3 CLIP AHA GRY |
| 9293-047-65 | RPLCE LD SET WAM/AM12 C1-C3 CLIP IEC GRY |
| 9293-047-66 | RPLCE LD SET WAM/AM12 V4-V6 CLIP AHA GRY |
| 9293-047-67 | RPLCE LD SET WAM/AM12 C4-C6 CLIP IEC GRY |
| 9293-033-52 | PAT CBL 10WIRE AHA SNAP JSCREW |
| 9923-033-53 | PAT CBL 10WIRE IEC SNAP JSCREW |
| 9293-032-52 | PAT CBL 10WIRE AHA BANANA JSCREW |
| 9293-032-53 | PAT CBL 10WIRE IEC BANANA JSCREW |

### Paper

| Part Number | Description |
|---|---|
| 9100-026-50 | PAPER ELI 280 US CASE/12/250 ZFOLD |
| 9100-026-53 | ARCHIVAL PAPER ELI 2XX 8.5X11 W/HDR CASE |
| 9100-026-51 | PAPER ELI 280 A4 CASE/12/250 ZFOLD |
| 9100-026-54 | ARCHIVAL PAPER ELI 2XX A4 W/HDR CASE |
| 9100-026-52 | PAPER ELI 280 SMART CASE/12/250 ZFOLD |
| 8342-007-02 | PAPER TRAY SPACER: required for A4 and Smart paper use. |
| 9100-026-55 | ARCHIVAL PAPER ELI 2XX SMART W/HDR CASE |

### Electrodes

| Part Number | Description |
|---|---|
| 108070 | ECG MONITORING ELECTRODES CASE 300 |
| 108071 | ELECTRODE RESTING TAB CASE/5000 |

## Acquisition Modules and Kits

| Part Number | Description |
|---|---|
| 9293-048-54 | WIRED PATIENT CABLE (AM12) |
| 30012-019-55 | WIRELESS ACQUISITION MODULE (WAM) W/O LEAD WIRES Version 1<br>Note, prior to ordering reference section Important Version Information for WAM (Wireless Acquisition Module). |
| 30012-019-56 | WIRELESS ACQUISITION MODULE (WAM) W/O LEAD WIRES Version 2<br>Note, prior to ordering reference section Important Version Information for WAM (Wireless Acquisition Module). |
| 9293-065-50 | WIRED PATIENT CABLE (AM12M) |
| 41000-031-50 | WAM wireless acquisition module with 10 wire AHA lead set with banana plugs |
| 41000-031-52 | WAM wireless acquisition module with 10 wire AHA lead set with clips |
| 41000-031-51 | WAM wireless acquisition module with 10 wire IEC lead set with banana plugs |
| 41000-031-53 | WAM wireless acquisition module with 10 wire IEC lead set with clips |
| 41000-032-52 | AM12 acquisition module with 10 wire AHA lead set with Clip Leads |
| 41000-032-50 | AM12 acquisition module with 10 wire AHA lead set with banana plugs |
| 41000-032-53 | AM12 acquisition module with 10 wire IEC lead set with Clip Leads |
| 41000-032-51 | AM12 acquisition module with 10 wire IEC lead set with banana plugs |

## Power Cords

| Part Number | Description |
|---|---|
| 3181-008 | POWER CORD US/CAN HOSPITAL 5-15P+320-C13 |
| 3181-012-01 | POWER CORD AUSTRALIA AS3112+IEC320-C13 |
| 3181-015-01 | POWER CORD UK BS1363+IEC320-C13 |
| 3181-002 | POWER CORD INTN'L CEE7/7+IEC320-C13 |
| 3181-017-01 | POWER CORD CHINESE |

## Manuals

| Part Number | Description |
|---|---|
| 9515-001-50-CD | PHYSICIAN'S GUIDE ADULT & PEDIATRIC UM |
| 9515-166-50-CD | ELI LINK USER MANUALS |
| 9515-181-50-CD | ELI 280 USER MANUALS |
| 9516-181-50-ENG | ELI 280 SERVICE MANUAL |

Contact your dealer or go to **www.hillrom.com** for more information.

# EQUIPMENT PREPARATION

## Initial Startup

When powering ON the ELI 280 the system requires the user to set certain configurations prior to obtaining an ECG:

1. Date and time (including daylight savings time selection).
2. Language.
3. AC filter frequency.
4. Height/weight units of measure.
5. WAM pairing (if used). (Refer to the WAM user manual for detailed pairing instructions to the device.)

See *System Settings*, to set language, AC filter frequency, and height/weight units of measure.

## Calibrating the Touchscreen Display

The touchscreen display requires calibration upon initial use and at regularly scheduled preventive maintenance intervals as prescribed in the service manual. Once initiated, the ELI 280 automatically begins the calibration sequence (detailed below). Through on-screen prompts, the user will touch strategically placed crosshairs to calibrate the display's touch point accuracy.

1. Initiate the calibration sequence by touching the ✚ symbol in the upper left corner of the display.
2. Touch the ✚ symbol in the upper right corner of the display.
3. Touch the ✚ in the lower right corner of the display.
4. Touch the ✚ in the lower left hand corner of the display.

## Connecting the Acquisition Module

Connect the AM12 to the ECG connector at the rear of the device. When using the optional WAM for ECG acquisition, this connection is not required.

**Figure 2-1**

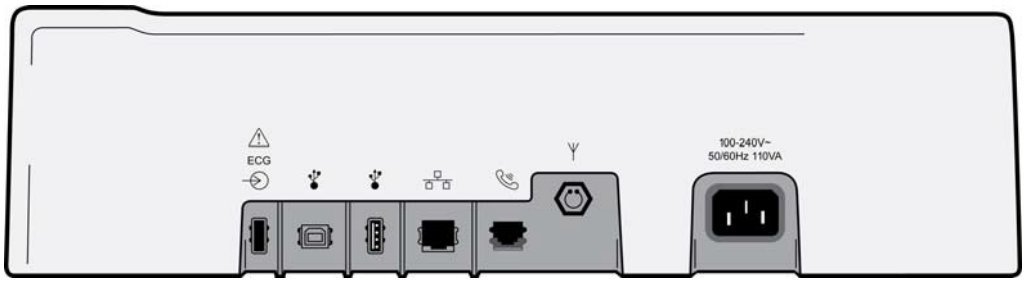


***NOTE**: The device must be configured at the factory for use with the WAM. Select from the* **WAM Pairing** *to determine the device's setting. "WAM Option Not Available" will display if the device is not configured to work with the WAM.*

***NOTE**: WAM must be paired to electrocardiograph before operation. Please see the WAM user manual for instructions.*

***NOTE**: To use the AM12 in a WAM-configured device, turn the AM12 on, select WAM in the Configuration Screen, and press "AM12 On."*

## Loading Paper

**Figure 2-2**

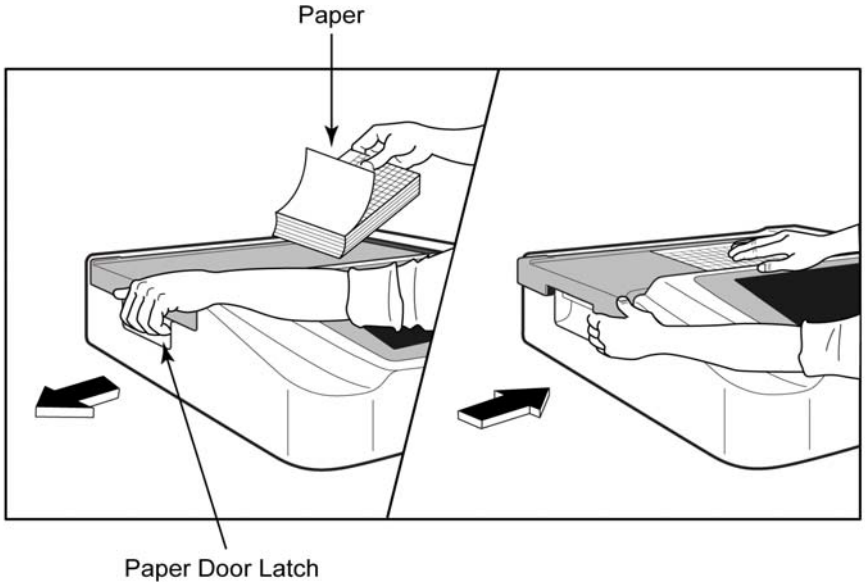


1. Remove packaging and cardboard backing from the paper stack.

2. Facing the front of the device, use the release latch on the left side and slide the paper tray cover to the left.

3. Place the stack of thermal paper into the paper tray such that the grid side of the paper is up when it is pulled over the paper tray cover. The paper cue mark (a small black rectangle) should be in the lower left corner.

4. Manually advance one page of paper beyond the closure point. Make sure the paper lays on the black roller evenly within the channel of the paper door. If paper is not manually advanced evenly, risk of jamming or queue faults increases.

5. Slide paper tray cover to the right until the cover latches in a locked position. You will hear a sharp click when the cover is properly latched.

***WARNING:*** *Risk of injury to fingers in paper door or platen drive mechanisms.*

***NOTE:*** *For proper performance of thermal printer, be certain to use Welch Allyn recommended thermal paper.*

## Smart and A4 Paper Users

To use Smart or A4 paper, please insert the paper tray spacer:

**Figure 2-3**

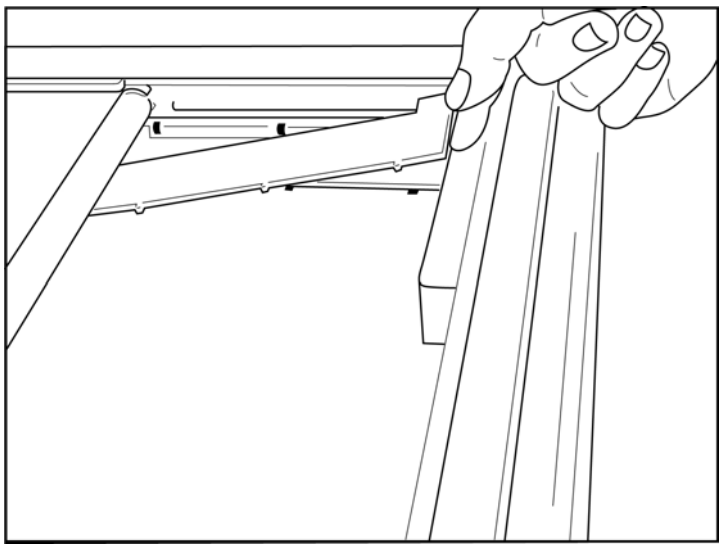

1. Slide paper tray spacer towards rear wall of paper tray. Align the bottom four plastic arms with the four openings in the base of the paper tray. Similarly, align the top 3 plastic arms with the three openings on the rear wall of the paper tray.

**Figure 2-4**

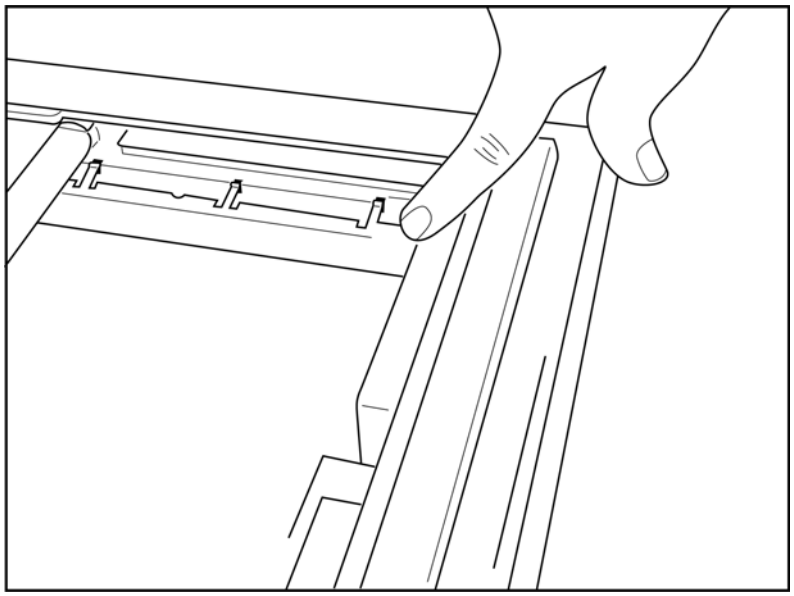

2. The paper tray spacer should be parallel with the rear wall of thepaper tray.

**Figure 2-5**

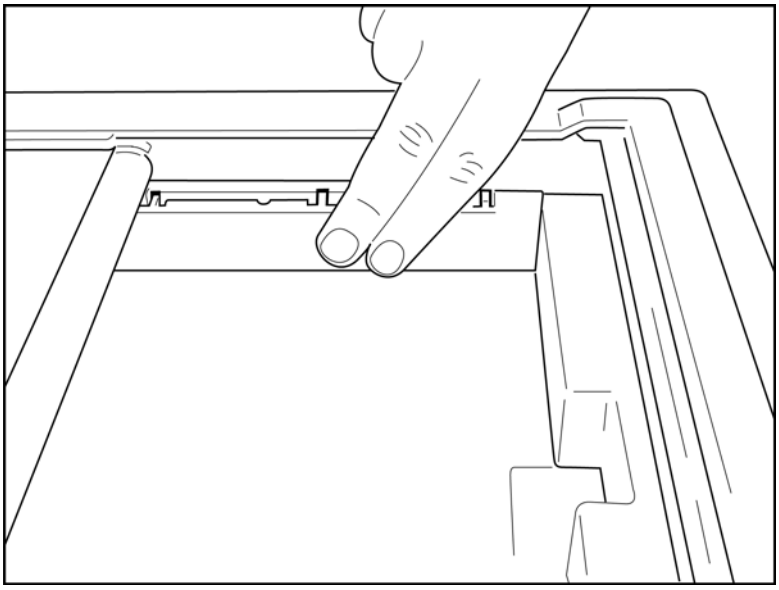

3. Gently press paper tray spacer in place.

4. Gently press on the top three plastic arms to remove the paper tray spacer.

# Powering the ELI 280

The ELI 280 is an AC powered and/or battery-operated device that can simultaneously charge the internal battery while connected to AC power. It is recommended that it be plugged in to AC power when not in use. The device can be operated on AC line voltage in the absence of a battery or in the event of an otherwise fully depleted battery. When line voltage is removed the device immediately switches to battery power.

## Operating on AC Power

- Plug the power cord into an AC wall outlet and into the AC connector on the rear panel of the ELI 280. (Reference Figure 1-3.)
- When the ELI 280 is plugged into AC power, the green AC power LED indicator illuminates below the ON/OFF button.
- Press the ON/OFF button when on battery power or touch the screen when on AC power to illuminate the real-time display.
- A battery icon with an electrical bolt through the battery (seen in the upper right corner of the touchscreen display) confirms that the device recognizes AC power and automatically controls battery charging.

  ***NOTE:*** *In the event of complete power loss due to battery removal or a hard reboot (depressing the On/Off button for greater than 7 seconds) the ELI 280 will require a touchscreen recalibration and time/date reset.*

## Operating on Battery Power

When operating on battery power, the battery icon changes to indicate its status:

- WHITE with a lightning bolt indicates the unit is charging on AC power.
- GREEN indicates battery is between 100% and 35% charge.
- YELLOW indicates battery is between 35% and 20% charge.
- RED indicates battery has less than 20% charge remaining. Immediately plug the ELI 280 into AC power if the battery indicator turns RED.

***NOTE:*** *Automatic power down occurs approximately 10 seconds after the battery icon starts FLASHING RED. Allow a minimum of 4 hours to recharge a battery to 85% of its charge level. Allow a minimum of 5 hours to recharge a battery to 90% of its charge level. The battery voltage may be viewed in the lower right of the display by selecting the Configuration icon, then selecting* ***About****.*

***NOTE****: A power down is accomplished by depressing* *followed by the Off button. To reboot the unit from a complete power down, use the On/Off button.*

***CAUTION:*** *If the battery voltage falls below 10.5 the device will automatically power down. After recharging long enough for the battery voltage to rise above 10.5V the device may again be operated on battery power. It may require up to 30 hours on AC line voltage to recharge the battery from its lowest level. Routinely discharging a battery to the lowest level will severely shorten the life of the battery.*

## Low Battery Failsafe Conditions

If the battery depletes to its lowest allowable level, the device will automatically power down to prevent permanent damage to the internal lead-acid battery. Plugging in the AC cord just prior to shut down and while the message "*Battery Low – Charge Unit*" is displayed (10 seconds), will prevent the automatic shutdown.

If the battery depletes to its lowest allowable voltage while in ECG acquisition mode, the device will display the message "*Battery Low – Charge Unit*", and will continue normal operation until the user exits the ECG acquisition mode. At that time the system will automatically power down allowing the user to complete an ECG already in progress.

## Power Status

The ELI 280 has three distinct power states: Power On, Stand-by, and Off.

### Power On

Power is automatically turned on when the device is connected to AC power. While powered on the ELI 280 performs all of its functions including display, acquisition, printing and transmission of ECGs.

### Stand-By

Stand-by occurs automatically after the system is left idle for longer than 5 minutes without user interaction. The user can also force the unit into Stand-by by pressing the ON/OFF button briefly. To leave the Stand-by mode press either the ON/OFF button or touch the display. All entered patient information is maintained in Stand-by mode and if a patient is connected, the ECG can be acquired. Effectively, only the display is turned off in Stand-by mode.

### Power Off

The ELI 280 automatically turns off after 15 minutes in Stand-by mode when on battery power and no patient is connected. The ELI 280 also turns off when battery voltage becomes too low. The operator can force the ELI 280 to Power Off state using the Off button in the screen. The ELI 280 will never automatically turn off when on AC power.

### Reboot

Depressing the ON/OFF button for longer than 7 seconds causes the ELI 280 to execute a hard reboot, preceded by the display flashing three (3) times. This will reset the internal clock to the default time and date. A hard reboot causes the system to prompt the user to recalibrate the touch function (by touching the red crosses one at a time), and re-enter the date and time at the next power On. The user can bypass setting the date and time by selecting DONE for immediate ECG acquisition, but this ECG will have the default acquired date. The user must then set the correct date and time manually using the Configuration icon, or, if connected to an ECG management system, by pressing

to sync the date and time. The ELI 280 will also reboot after the battery has been disconnected.

> ***NOTE:*** *It is normally NOT NECESSARY to reboot the ELI 280. Only reboot the ELI 280 if the touch screen needs calibration or if you have an unrecoverable problem.*

## Setting Date and Time

1. Select from the real-time display.
2. Select **Date/Time.**
   a. Touch **Year**. Use the touchscreen keyboard to type in the correct year, then press **Done**.
   b. Set the correct Month, Day, Hour and Minute by pressing each appropriate field and using the touchscreen dropdown menu to choose the correct setting. Use the double arrows at the bottom of the menu to view more choices. Select Done to save the new setting. To exit the menu without making a new selection, use **Cancel** or touch anywhere outside the menu.
   c. Touch **Time Zone**. Use the dropdown menu to select and touch the appropriate time zone. Use the double arrows to view the next set of time zones. To exit the menu without making a new selection, use **Cancel** or touch anywhere outside the menu.
   d. Touch **Daylight Savings**. Select **Yes** if Daylight Saving Time affects your time zone or **No** if it does not. To exit the menu without making a new selection, use **Cancel** or touch anywhere outside the menu.
   e. To set the precise date and time for when Daylight Savings starts and ends, proceed as follows:
      a. Touch either set of double arrows (◀◀ or ▶▶) at the bottom of the Set Time/Date screen.
      b. Set the Daylight Saving START Month, Week, Day, Hour and Minute.
      c. Set the Daylight Saving END Month, Week, Day, Hour and Minute.
      d. Select **Done** to save and exit, or **Cancel** to exit without saving.
3. Select **Done** again to return to the real-time display.

## Time Synchronization

The SYNC feature allows time synchronization to occur only when the ELI 280 is interfaced to a product which supports ELI Link or E-Scribe.

1. Select from the real-time display.
2. Select **Advanced.**
3. Select **System.**
4. Select ▶▶ to advance to the next page.
5. Select **Sync Mode.**
6. Select **Transmit+Orders+Date/Time** from the dropdown menu.
7. Select **Done** to save and exit, or **Cancel** to exit without saving. Select **Done** again to return to the real-time display.

   ***NOTE**: Select* *at any time it appears to return to the real-time display.*

   ***NOTE:** This device supports automatic time synchronization with a remote server. Inaccurate time/date settings can result in ECGs marked with inaccurate time stamps. Confirm the accuracy of the synchronized time prior to acquiring ECGs.*

## Installing the WLAN Antenna

The ELI 280 with optional WLAN module ships with the antenna in the accessory box. To install the antenna, perform the following:

1. Locate and remove the antenna from the accessory box.
2. Locate the antenna connector on the back of the ELI280.
3. Mount the antenna on the connector by rotating the antenna clockwise. The antenna must be finger tight to its connector.
4. Locate the built-in hinge and fold the antenna (it will now be at a 90° angle); continue to rotate the antenna clockwise until it is placed vertically. This will guarantee the best signal for the WLAN module.

***NOTE:*** *To configure for WLAN use, see Connectivity and ECG Transmission.*

## Important Version Information for WAM (Wireless Acquisition Module)

There are two generations of WAM (Wireless Acquisition Module) and UTK (USB Transceiver Key). A legacy WAM and UTK and a newer version 2 WAM and UTK.

### How to physically identify the different WAM and UTK versions:

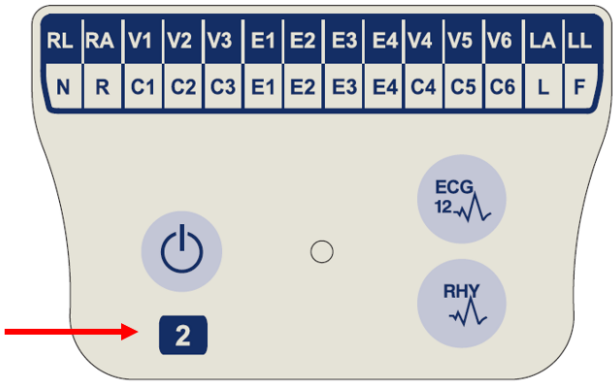


A number 2 located on the WAM label indicates a 30012-019-56 version 2 WAM.

If this number 2 label is not present it indicates a version 1 WAM.

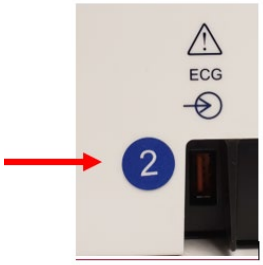


A number 2 circular label on the back housing of the ELI electrocardiograph located next to the ECG input connector indicates the electrocardiograph internally contains a version 2 UTK.

If this circle 2 label is not present it indicates the electrocardiograph internally contains a version 1 UTK.

### Important note regarding WAM connectivity

A version 1 WAM must be used with a version 1 UTK, and a version 2 WAM must be used with a version 2 UTK. If the version of WAM does not match the version of UTK that is within the ELI electrocardiograph, the WAM will not pair to the electrocardiograph and a “SEARCHING FOR WAM” message will continue to be displayed. When using the WAM, it must be successfully paired to the electrocardiograph before operation.

## Using the WAM Acquisition Module

ECG acquisition and rhythm strip printing can be performed at the WAM acquisition module in addition to the ELI electrocardiograph. To use the WAM, refer to the WAM user manual.

The ELI 280 must be configured at the factory for use with the WAM. If the ELI 280 is configured for use with the

WAM, the two devices must be paired to function properly. Please see the WAM user manual for pairing instructions.

> ***NOTE****: WAM must be paired to electrocardiograph before operation. Refer to the WAM operators manual for assistance in pairing the WAM.*
>
> ***NOTE:*** *If no patient connection is detected after 15 minutes, the WAM will turn off.*

## Using the AM12 Acquisition Module

ECG acquisition and rhythm strip printing can be performed at the AM12 acquisition module after the patient is connected in addition to the ELI electrocardiograph. Refer to Record an ECG section to prepare the patient.

1. Press to acquire 12-lead ECG.
2. Press for continuous rhythm print; press again to stop printing.

The LED indicates status of the connected leads:

- Not lit = Electrocardiograph is powered off or AM12 is not connected.
- Green light = Power is on and all leads are connected.
- Yellow light = Lead fail.

## Using the AM12M Acquisition Module

The AM12M includes a DB15 connector to allow connection of an external patient cable, such as the 10-wire J-Screw patient cable, to obtain 12-lead ECG in the same manner as the AM12 acquisition module.

DB15 Connector

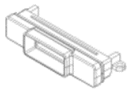

Once the external cable is connected, refer to above AM12 instructions for use.

# RECORD AN ECG

## Patient Preparation

Before attaching the electrodes, assure the patient fully understands the procedure and what to expect.

- Privacy is very important in assuring the patient is relaxed.
- Reassure the patient that the procedure is painless and that the electrodes on their skin are all that they will feel.
- Make sure the patient is lying down and is comfortable. If the table is narrow, tuck the patient's hands under his/her buttocks to ensure their muscles are relaxed.
- Once all the electrodes are attached, ask the patient to lie still and to not talk. Explaining the process to the patient may help relax them further and assist in acquiring a good ECG.

### Preparing Patient Skin

Thorough skin preparation is very important. There is natural resistance on the skin surface from various sources such as hair, oil, and dry, dead skin. Skin preparation is intended to minimize these effects and maximize the quality of the ECG signal.

To prepare the skin:

- Shave hair from electrode sites if necessary.
- Wash area with warm, soapy water.
- Dry skin vigorously with a pad such as 2 x 2 or 4 x 4 gauze to remove dead skin cells and oil, and to increase capillary blood flow.

***NOTE**: With elderly or frail patients take care to not abrade the skin causing discomfort or bruising. Clinical discretion should always be used in patient preparation.*

## Patient Hookup

Correct electrode placement is important for acquiring a successful ECG.

A good minimum-impedance pathway will provide superior noise-free waveforms. High quality silver-silver chloride (Ag/AgCl) electrodes similar to those provided by Welch Allyn are recommended to be used.

***TIP**: Electrodes should be stored in an air-tight container. Electrodes will dry out if not stored properly which will cause loss of adhesion and conductivity.*

### To Attach the Electrodes

1. Expose the arms and legs of the patient to attach the limb leads.
2. Place the electrodes on flat, fleshy parts of the arms and legs.
3. If a limb site is not available, place the electrodes on a perfused area of the stump.
4. Attach the electrodes to the skin. A good test for firm electrode contact is to slightly tug on the electrode to check adhesion. If the electrode moves freely, it needs to be changed. If the electrode does not move easily, a good connection has been obtained.

For accurate V-lead placement and monitoring, it is important to locate the 4th intercostal space. The 4th intercostal space is determined by first locating the 1st intercostal space. Because patients vary with respect to body shape, it is difficult to palpate the 1st intercostal space with accuracy. Thus, locate the 2nd intercostal space by first palpating the little bony prominence called the **Angle of Louis**, where the body of the sternum joins the manubrium. This rise in the sternum identifies where the second rib is attached, and the space just below it is the 2nd intercostal space. Palpate and count down the chest until you locate the 4th intercostal space.

## Patient Hookup Summary Table

| AAMI Lead | IEC Lead | Electrode Position |
|---|---|---|
| V1 Red | C1 Red | On the 4th intercostal space at the right sternal border. |
| V2 Yellow | C2 Yellow | On the 4th intercostal space at the left sternal border. |
| V3 Green | C3 Green | Midway between V2/C2 and V4/C4 electrodes. |
| V4 Blue | C4 Brown | On the 5th intercostal space at the left midclavicular line. |
| V5 Orange | C5 Black | Midway between V4/C4 and V6/C6 electrodes. |
| V6 Violet | C6 Violet | On the left midaxillary line, horizontal with V4/C4 electrode. |
| LA Black<br>RA White | L Yellow<br>R Red | On the deltoid, forearm, or wrist. |
| LL Red<br>RL Green | F Green<br>N Black | On the thigh or ankle. |

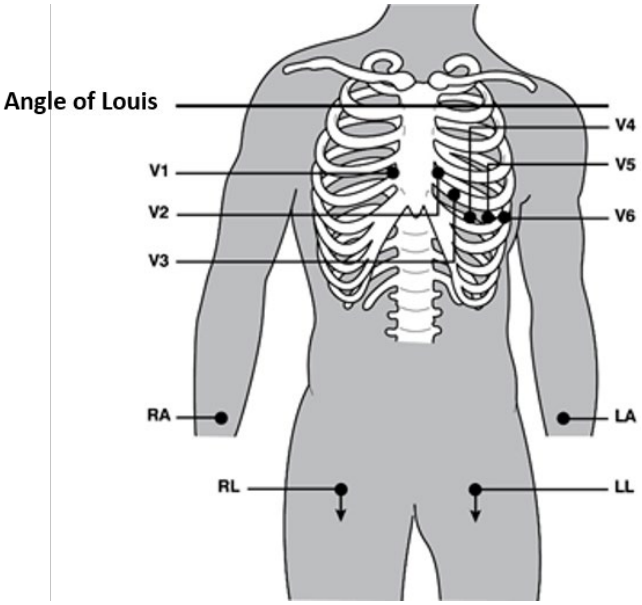

# Patient Demographic Entry

Patient demographic information can be entered before acquisition. The entered patient demographics fields will remain populated until the ECG signal is acquired. If you attempt to acquire an ECG before patient hookup, the ELI 280 will prompt you to complete patient hookup before proceeding.

To access the patient demographic data entry form, select from the real-time display. Select at any time it appears to return to the real-time display.

## Patient Demographics Formats

The patient demographic labels available are determined by the ID format selected from the configuration settings. In addition to short, standard, and long patient ID formats, the ELI 280 also supports a custom ID format. The custom ID format designed in ELI Link or E-Scribe can be downloaded to the ELI 280. Additional information about the custom ID can be found in *ECG Directory* or in the ELI Link and E-Scribe user manuals.

## Manually Entering Patient Demographics

Patient demographics can be completed manually. Manually entered patient demographics are saved after completing the entries and pressing **Done.**

Use the following steps to manually enter the patient demographics:

1. Select from the real-time display.
2. Touch any of the demographic fields to display a touchscreen keyboard.
3. Once a demographic field is selected, the color of its data box will change.
4. Use the touchscreen keyboard to complete the demographic field. Once completed, touch the next demographic field or press the tab icon. Repeat this process until all the demographic fields have been completed.

   ***NOTE**: Do not press Done until the data entry for all fields is complete. Pressing Done prior to completion will return the user to the main screen. Select the Patient Demographic icon to re-enter the Patient Demographic screen and complete the data entry.*
5. The Month, Day, and Gender fields will also display a dropdown list when touched for easy selection.
6. When finished, select **Done** to save and return to the real-time display. Skipped fields will appear as a blank field on the header of the ECG printout.

   ***NOTE**: If no age is entered before acquiring an ECG, the interpretation will default to a 40-year old male. The statement "INTERPRETATION BASED ON A DEFAULT AGE OF 40 YEARS" will be added to the interpretation text.*

   ***NOTE**: If an age of zero (0) is used, the interpretation will default to a 6-month old infant. The statement "INTERPRETATION BASED ON A DEFAULT AGE OF 6 MONTHS" will be added to the interpretation text.*

   ***NOTE**: A yellow background is used where Mandatory Fields are required (i.e., patient last name, ID, and/or technician ID)*

## Patient Demographics from Stored ECGs

Patient demographics can be completed automatically by using an existing ECG in the directory. Use the following steps to automatically enter the patient demographics from an existing ECG record:

1. Select from the real-time display.
2. Select **Directory.**
3. Use the double arrows (◀◀ or ▶▶) at the bottom of the screen to scroll through the ECG records. To select the desired patient, touch the ECG record.
4. To search by patient name, touch **Search Directory** at the top of the display.
5. Use the touchscreen keyboard to enter the first few letters of the name or ID and move to the general location of the desired patient record, or continue typing the patient name to obtain a closer proximity.
6. Select the patient's name from the presented list.
7. Once the desired patient is selected, select **New ECG** to return to the patient ID screen with all demographic fields populated.
8. Press **Done** to return to the real time display.

   ***NOTE:*** *The ELI 280 must have ECG input to retain patient demographics.*

   ***TIP:*** *Automatically populating demographic fields via the directory is only possible when the ID formats are the same between records.*

   ***TIP:*** *Entry of a lower case letter as the first letter in the last or first name will automatically be capitalized.*

## Patient Demographics from Orders

The ELI 280 can download orders from ELI Link and E-Scribe and use the orders to populate demographic fields. ECGs performed with orders contain links to those orders, and healthcare IT systems can automatically associate (i.e. reconcile) the ECGs with the orders. To use orders, follow these steps:

1. Select from the real-time display.
2. Select **MWL.**
3. Touch the **Query Code** box and select a pre-configured query, or enter a short search string to perform a patient-specific search.
4. Touch to retrieve the orders.
5. Use the double arrows (◀◀ or ▶▶) at the bottom of the screen to scroll through the orders. Touch the column headers to sort the orders, or touch the **Search Worklist** box to enter a search string.
6. Touch the desired order to load the demographics.
7. Fill in any remaining fields.
8. Touch **Done** to return to the real time display.

***NOTE**: If ELI Link is configured for DICOM, the DICOM option must be installed on the ELI 280, and its Communication Protocol must be set for DICOM32 or DICOM32ext.*

***NOTE**: Before downloading orders, the ELI 280 must have downloaded the Custom ID from ELI Link or E-Scribe.*

***NOTE**: Changing key patient identifying fields like the name, ID, sex, birthdate, etc. after selecting an order will cause the ECG to be disassociated with that order and treated as an unordered test.*

***NOTE**: The user must have Technician or Administrator permissions. If the user is currently a Guest, they must log in as a Technician or Administrator or enter the ELI 280's Technician password.*

***NOTE**: When an ECG is linked to an order, the order's scheduled time will be displayed at the bottom of the patient demographics screen. If the time is not displayed, the ECG is not linked to an order.*

### Patient Demographics from Barcodes

The ELI 280's optional barcode scanner supports popular symbologies such as Code 39, Code 128, Aztec, Data Matrix, and PDF 417, just to name a few. If the facility's patient ID bracelets encode several demographic fields, like the patient's ID, account number, name, sex, and birthdate, it may be possible to program the barcode scanner to parse the individual values into the ELI 280's patient demographics data entry form. Refer to the barcode scanner user manual for instructions on setup and use.

When the barcode scanner is programmed to parse several demographic values from a barcode, the user may scan the barcode from the main screen. When a barcode is scanned from the main screen and the ELI 280 detects multiple lines of text, it automatically jumps to the patient demographics form and copies the values into the form. From there, the user can fill in the remaining fields and touch **Done** to go back to the main screen.

### Order Lookup with Barcodes

Patient ID bracelets often include barcodes that encode a single patient identifier. It could be the patient's permanent medical record number, admission ID, account number, or something similar. Scanning the barcode symbol can be a convenient way to find the patient's order. Assuming the ELI 280's worklist has been recently synchronized with the host, the user can scan the patient's barcode from the main screen. When the ELI 280 detects a single line of text in the barcode, it automatically jumps to the **MWL** page and copies the scanned value into the **Search Worklist** box. If the patient's order is in the list, it will be automatically selected. If the patient's order is not found, the worklist may need to be resynchronized with the host. In that case, consider touching the **Sync** button to refresh the worklist and search for the order again.

Once the order is found and selected, touch **Done** to go to the demographics screen and fill in any remaining fields before touching **Done** to go back to the main screen.

### ECG Display Setup – Individual ECG

The Display Setup screen allows the user to set the following display configurations for an individual patient: display format, display speed, display (ECG) gain, and display (ECG) filter. Access these configuration choices by pressing anywhere on the touchscreen's real-time ECG waveform. The display setup returns to the configured setup after each ECG collection.

**Display Format:**
The real-time 12-lead ECG view can be set to any of the following formats by pressing the desired choice on the touchscreen display: 12x1; 4x2; 6x2; and any three pre-selected leads (i.e. II-V1-V5).

**Display Speed:**
The real-time display sweep speed and rhythm printout speed can be set to any of the following speeds by pressing the desired choice on the touchscreen display: 5 mm/s, 10 mm/s, 25 mm/s, or 50mm/s.

**Display Gain:**
The real-time ECG gain can be set to any of the following amplifications by pressing the desired choice on the touchscreen display: 5 mm/mV, 10 mm/mV, or 20 mm/mV. The Gain setting is printed at the bottom right corner of the ECG printout. The Display Gain setting will also be used on the printed ECG, unless changed in the Acquired screen.

**Display Filter:**
The ECG filter can be set to any of the following frequency limits by pressing the desired choice on the touchscreen display: 40 Hz, 150 Hz, or 300 Hz for ECG printouts. The Filter setting is printed at the bottom right corner of the ECG printout. The Display Filter setting will also be used on the printed ECG, unless changed in the Acquired screen.

***WARNING*:** *When the 40 Hz filter is used, the frequency response requirement for diagnostic ECG equipment cannot be met. The 40 Hz filter significantly reduces high-frequency components of the ECG and pacemaker spike amplitudes, and is recommended only if high-frequency noise cannot be reduced by proper procedures.*

***NOTE**: Changes to the ECG display setup for an individual ECG only take affect when a patient is connected to the device.*

## ECG Acquisition and Printing with WAM or AM12

Control buttons located on the WAM and AM12 are available to initiate ECG acquisition and rhythm strip printing. Refer to the acquisition module instructions for use on page 47.

## ECG Acquisition

ECG data is collected immediately and continuously once the patient is connected to the acquisition module.

For best results, before pressing

or

**,** instruct the patient to relax in the preferred supine position to ensure that the ECG is free from motion artifact(noise).

If workflow permits patient demographic entry prior to acquisition, enter the patient identification information as explained in *Patient Demographic Entry*.

## ECG Screen Notification Messages

The VERITAS interpretive algorithm detects Leads Off and Lead Fault conditions. It also detects electrode misplacements based on normal physiology and ECG lead order and tries to identify the most likely switch. If the algorithm detects an electrode lead misplacement, it's recommended that the user confirm the other electrode positions in the same group (limb or chest).

When the condition that triggered the notification message is addressed the VERITAS collects 10 seconds of new data before analyzing the ECG.

| Message | Description | Corrective Action |
|---|---|---|
| Leads Off | Patient is not connected | Connect patient to ECG Leads. |
| Lead Fault | Faulty lead(s) | Re-prep and replace electrode(s) if necessary to obtain satisfactory waveform(s). |
| "Limb leads reversed?"<br>"LA or LL reversed?"<br>"RA or RL reversed?"<br>"RA or LA reversed?"<br>"V1 or V2 reversed?"<br>"V2 or V3 reversed?"<br>"V3 or V4 reversed?"<br>"V4 or V5 reversed?"<br>"V5 or V6 reversed?" | Electrode Wrong Position | Connect the lead(s) correctly to the patient or connect the lead(s) to the proper location. |
| WAM Low Battery | Low battery detected in the WAM | Replace the batteries in the WAM. |
| Searching for WAM | WAM not detected. WAM may be out of range, powered OFF, depleted battery, or requires additional pairing. | Check WAM proximity to the ELI 280; check WAM AA battery is new and that the WAM is powered ON. |

***NOTE**: In the event of a lead fault or lead misplaced message the clinician may force ECG acquisition by depressing the ECG button again.*

## ECG Electrode Placement Troubleshooting

Please refer to the following troubleshooting guide based on Einthoven's Triangle:

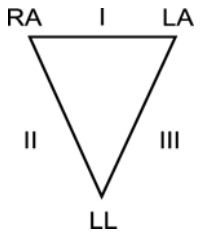


| Artifact | Check Electrode |
|---|---|
| Lead II and III artifact | Poor LL electrode or left leg tremor |
| Lead I and II artifact | Poor RA electrode or right arm tremor |
| Lead I and III artifact | Poor LA electrode or left arm tremor |
| V Leads | Re-prep site & replace electrode |

Press . The real-time ECG view is then replaced with the acquired ECG view. The default real-time ECG view is not available in the acquired ECG view for navigation purposes.

> ***NOTE:*** *New Function Icons are available in the acquired ECG view.*
>
> ***NOTE:*** *Functions are not available during acquisition.*

## Acquiring a STAT ECG

To acquire an emergency (STAT) or unidentified ECG for a new patient prior to entering patient demographics, follow the instructions below:

1. Select from the real-time display.
2. Select a second time. The ECG will be acquired.
3. The messages "Collecting 10 seconds of data," followed by "Captured," "Analyzed, and "Formatted" appear in the top left corner of the display.
4. Once completed, the acquired ECG displays on a red grid background.
5. To return to the real-time display without entering patient demographics, select **Done.** The ECG can be found in the directory by acquisition date.

## Adding Patient Demographics after a STAT ECG

Use the following steps to add patient demographics immediately after acquiring a STAT ECG:

1. From the acquired ECG screen, select **.**
2. If the STAT ECG is for an existing patient, select **No.** Enter the patient demographics as described earlier in this section. When patient data is complete, select **Done** to return to the acquired ECG view. Select **Done** again to save and return to the real-time display.
3. If the STAT ECG is not for an existing patient, select **Yes**. Manually complete the demographic fields or select the existing demographics from the patient directory as described earlier in this section. Select **Done** to save and return to the real-time display.
4. From the acquired ECG view, select **Print** or **Send.** To return to the real-time display select **Done**. Select **Erase** to delete the STAT ECG and return to the real-time display.

## Best 10 Seconds of ECG

The ELI 280 incorporates a 5-minute memory buffer for collection of ECG data. When Best10 is enabled, the device will automatically select the best 10 seconds of ECG data from within the 5-minute buffer. The best 10 second determination is based upon measurement of high and low-frequency noise found in the 10-second ECG segments.

When Last10 is selected the device will automatically present the last ten seconds of ECG from the data stored in the memory buffer.

### Selecting Best 10 or Last 10

1. Select

from the real-time display to acquire an ECG.
2. From acquired ECG view, touch anywhere on the red grid ECG to open the configuration screen.
3. Select **Best10** or **Last10**.
4. Select **OK** to save the selection, and reformat, print, and display the ECG. Select **Cancel** to exit without saving.

***NOTE:*** *If a single limb lead or two precordial lead fail condition occurs, the Best 10 feature is disabled until the limb lead fail or precordial lead fail condition is resolved. Once the condition is rectified the Best 10 feature automatically becomes available.*

## Configuring the ECG Report

The ELI 280 can automatically print up to nine copies of the ECG report following acquisition. Print format, trace speed, ECG gain, ECG filter setting and pacer channel can be set as a default in the Configuration menu, or configured per ECG by touching the red grid screen display. This will allow for selection of plot format, gain, speed, and filter setting change for the selected patient.

### To change print format of an acquired ECG

1. From acquired ECG view, touch anywhere on the red grid ECG to open the configuration screen.
2. Select the desired choices for Print Format, Print Speed, Print Gain, Print Filter and Pacer Channel.
3. Select **OK** to save the selection, and reformat and display the ECG. Select **Cancel** to exit without saving.
4. Select **Print**, **Send**, **Erase**, or **Done**.

### To automatically print (or not print)

1. Select
from the real-time display.
2. Select **Advanced** followed by **ECG.**
3. Use the double arrow (⏩) to locate the # Copies: setting.
4. Touch the number of copies field and select the desired number of copies from the dropdown menu. Select **0** to ensure the printer does not automatically print the ECG following acquisition.
5. Select **Done** to save and return to the Configuration menu, or select **Cancel** to return without saving.

## Acquired ECG Storage

Print, send, erase, save, or view the interpretation for an acquired ECG by following the steps below:

1. Select from the real-time display to acquire an ECG.
2. From acquired ECG view, press the double arrow (⏩) to advance through the report interpretation. Press the double arrow (⏩) to return to acquired ECG view.
3. Press **Print** to initiate a printout.
4. Press **Send** to transmit the report to an ECG management system.
5. Press **Erase** to delete the record from the directory.
6. Press **Done** to save the record to the directory and return to real-time display. The message "Saving" will confirm storage.

## Acquiring Rhythm Strips

You can print a rhythm strip of the real-time ECG viewed on the display. Rhythm strips from the real-time ECG display can be acquired with the patient connected to the ELI 280 and after patient identification information is entered. A rhythm strip may also be printed without entering the patient ID by .

***NOTE:*** *Printed rhythm acquisitions are not stored in the ELI 280.*

The rhythm strip's display format, trace speed, ECG gain and ECG filter setting can be configured to a variety of settings by performing the following steps:

1. From the real-time display, touch anywhere within the ECG display to view the setting choices.
2. Select the desired choices for Display Format, Display Speed, Display Gain and Display Filter.
3. Press **OK** to save the settings, and reformat and display the ECG. Select **Cancel** to return without saving.

To stop a rhythm print, press Stop and the writer will automatically stop, allowing the user to start acquiring additional data with new time stamp and demographics if required.

***NOTE:*** *Rhythm printing is only enabled when patient is connected. Likewise, rhythm printing will automatically stop if a patient is disconnected.*

***NOTE:*** *While printing, if the cue mark is not detected for 5 consecutive pages, printing will stop.*

When Rythym Format selection is configured to either 3- or 6-Channel, press Leads to switch between lead groups that are printed and viewed during rhythm printing. Selection of the Lead button during rhythm printing stops and starts the printing and display of the lead sets in the following order:

For 6 channel Format:
- a) Configured set
- b) I – aVF
- c) VI – V6

For 3 channel Format:
- a) Configured set
- b) I – III
- c) aVR – aVF
- d) V1 – V3
- e) V4 – V6

# CONNECTIVITY AND ECG TRANSMISSION

## ECG Transmission

The ELI 280 can transmit acquired ECG records to an E-Scribe system, ELI Link or to a third-party electronic medical record (EMR) system. The interface to these systems can be via direct connection, factory installed internal modem (optional), LAN or WLAN connection, using UNIPRO 32, or DICOM 32 protocols.

Before transmitting ECGs, certain configuration options must be set in system settings depending upon the transmission media used and the electronic storage media being transmitted to.

> ***NOTE:*** *Telephone transmission is available with internal modem only.*
>
> ***NOTE****: In order to properly connect to telephone lines, the ELI 280 internal modem needs to be set on the proper country code. This is an internal setting and should not be confused with International calling codes.*
>
> ***NOTE****: Select* *at any time it appears to return to the real-time display.*

In order to transmit ECGs the WLAN signal must be strong enough to transmit. WLAN performance may vary due to changes in RF (radio frequency) properties at your site or to environmental conditions. Signal strength can be measured using a utility available in the ELI 280 menu.

### Testing RF signal strength

1. Select from the real-time display.
2. Select **Advanced.**
3. Select **Network.**
4. Signal strength displays as zero to five bars with zero being no RF signal strength and five bars being full RF signal strength.
5. If an adequate signal is not being obtained, move to a location where more bars display before attempting to transmit.

   ***NOTE:*** *Intermittent connectivity in certain areas of your facility often indicates the need to re-initiate the transmission process. Consult the IT department at your facility or your Welch Allyn Field Service Engineer regarding modification of your WLAN to improve system performance.*

   ***NOTE****: Ensure the system has been configured to the area network before attempting a RF signal strength test.*

### Transmitting Records to the Cardiology Management System

To transmit a record to the cardiology management system, press **Send** from the acquired ECG view.

To transmit all un-transmitted records, press from the real-time display.

# Internal Modem Connection

> ***NOTE:*** *Modem functionality can be confirmed by the presence of an RJ 11 connector on the rear of the unit located just below the* *Icon.*

To set up the ELI 280 for modem transmission:

1. Select from the real-time display.
2. Select **Advanced.**
3. Select **Modem.**
4. Connect an active telephone line cable to the telephone jack, located on the back of the ELI 280.
5. Confirm the telephone number in the configuration settings.

## Internal Modem Initialization

The modem initialization string code is configured for the country where the system was shipped. If the system is relocated to a different country the modem initialization string code will need to be reprogrammed. Contact your local Welch Allyn Support Center for assistance reprogramming this code.

## External Modem Country Code List

| Country | Code | Country | Code |
|---|---|---|---|
| Afghanistan | 34 | Canary Islands | 34 |
| Albania | 34 | Cape Verde | 34 |
| Algeria | 34 | Cayman Islands | 34 |
| American Samoa | 34 | Central African Republic | 34 |
| Andorra | 34 | Chad | 34 |
| Angola | 34 | Chile | 34 |
| Anguilla | 34 | China | 34 |
| Antigua and Barbuda | 34 | Colombia | 34 |
| Argentina | 34 | Congo | 34 |
| Armenia | 34 | Congo, The Democratic Republic of the | 34 |
| Aruba | 34 | Cook Islands | 34 |
| Australia | 1 | Costa Rica | 34 |
| Austria | 34 | Côte D'Ivoire | 34 |
| Azerbaijan | 34 | Croatia | 34 |
| Bahamas | 34 | Cyprus | 34 |
| Bahrain | 34 | Czech Republic | 25 |
| Bangladesh | 34 | Denmark | 34 |
| Barbados | 34 | Djibouti | 34 |
| Belarus | 34 | Dominica | 34 |
| Belgium | 34 | Dominican Republic | 34 |
| Belize | 34 | East Timor | 34 |
| Benin | 34 | Ecuador | 34 |
| Bermuda | 34 | Egypt | 34 |
| Bhutan | 34 | El Salvador | 34 |
| Bolivia | 34 | Equatorial Guinea | 34 |
| Bosnia and Herzegovina | 34 | Estonia | 34 |
| Botswana | 34 | Ethiopia | 34 |
| Brazil | 34 | Faero Islands | 34 |
| Brunei Darussalam | 34 | Fiji | 34 |
| Bulgaria | 34 | Finland | 34 |
| Burkina Faso | 34 | France | 34 |
| Burundi | 34 | French Guiana | 34 |

| Country | Code | Country | Code |
|---|---|---|---|
| Cambodia | 34 | French Polynesia | 34 |
| Cameroon | 34 | Gabon | 34 |
| Canada | 34 | Gambia | 34 |
| Georgia | 34 | Korea, Republic of (South Korea) | 30 |
| Germany | 34 | Kyrgyzstan | 34 |
| Ghana | 34 | Lao People's Democratic Republic | 34 |
| Gibraltar | 34 | Latvia | 34 |
| Greece | 34 | Lebanon | 34 |
| Greenland | 34 | Liberia | 34 |
| Grenada | 34 | Libya | 34 |
| Guadeloupe | 34 | Liechtenstein | 34 |
| Guam | 34 | Lithuania | 34 |
| Guatemala | 34 | Luxembourg | 34 |
| Guernsey, C.I. | 34 | Macau | 34 |
| Guinea | 34 | Macedonia, The Former Yugoslav Republic | 34 |
| Guinea-Bissau | 34 | Madagascar | 34 |
| Guyana | 34 | Malawi | 34 |
| Haiti | 34 | Malaysia | 30 |
| Holy See (Vatican City State) | 34 | Maldives | 34 |
| Honduras | 34 | Mali | 34 |
| Hong Kong | 30 | Malta | 34 |
| Hungary | 30 | Martinique | 34 |
| Iceland | 34 | Mauritania | 34 |
| India | 30 | Mauritius | 34 |
| Indonesia | 30 | Mayotte | 34 |
| Iran | 34 | Mexico | 34 |
| Iraq | 34 | Moldova, Republic of | 34 |
| Ireland | 34 | Monaco | 34 |
| Isle of Man | 34 | Mongolia | 34 |
| Israel | 30 | Montserrat | 34 |
| Italy | 34 | Morocco | 34 |
| Jamaica | 34 | Mozambique | 34 |
| Japan | 10 | Namibia | 34 |
| Jersey C.I. | 34 | Nauru | 34 |
| Jordan | 34 | Nepal | 34 |
| Kazakhstan | 34 | Netherlands | 34 |
| Kenya | 34 | Netherlands Antilles | 34 |
| Kiribati | 34 | New Caledonia | 34 |
| Kuwait | 34 | New Zealand | 9 |

| Country | Code | Country | Code |
|---|---|---|---|
| Niger | 34 | Nicaragua | 34 |
| Nigeria | 34 | Swaziland | 34 |
| Norway | 34 | Sweden | 34 |
| Oman | 34 | Switzerland | 34 |
| Pakistan | 34 | Syrian Arab Republic | 34 |
| Palestine Territory, Occupied | 34 | Taiwan | 34 |
| Panama | 34 | Tajikistan | 34 |
| Papua New Guinea | 34 | Tanzania, United Republic of | 34 |
| Paraguay | 34 | Thailand | 34 |
| Peru | 34 | Thaiti | 34 |
| Philippines | 30 | Togo | 34 |
| Poland | 30 | Tonga | 34 |
| Portugal | 34 | Trinidad and Tobago | 34 |
| Puerto Rico | 34 | Tunisia | 34 |
| Qatar | 34 | Turkey | 34 |
| Reunion | 34 | Turkmenistan | 34 |
| Romania | 34 | Turks and Caicos Islands | 34 |
| Russian Federation | 34 | Uganda | 34 |
| Rwanda | 34 | Ukraine | 34 |
| Saint Kitts and Nevis | 34 | United Arab Emirates | 34 |
| Saint Lucia | 34 | United Kingdom | 34 |
| Saint Vincent and the Grenadines | 34 | Uruguay | 34 |
| Samoa | 34 | USA | 34 |
| Saudi Arabia | 34 | Uzbekistan | 34 |
| Senegal | 34 | Vanuatu | 34 |
| Seychelles | 34 | Venezuela | 34 |
| Sierra Leone | 34 | Viet Nam | 30 |
| Singapore | 30 | Virgin Islands, British | 34 |
| Slovakia | 34 | Virgin Islands, U.S. | 34 |
| Slovenia | 30 | Yemen | 34 |
| Solomon Islands | 34 | Yugoslavia | 34 |
| South Africa | 35 | Zambia | 34 |
| Spain | 34 | Zimbabwe | 34 |
| Sri Lanka | 34 | | |
| Sudan | 34 | | |
| Surinam | 34 | | |

## Local Area Network (LAN) Connection and Setup

***NOTE:*** *LAN functionality can be confirmed by the presence of the LAN icon in the Settings menu.*

The ELI 280 must be configured for LAN transmission by the facility Information Technology (IT) professional:

1. Connect the ethernet cable from the facility's local area network to the LAN connection at the rear of the ELI 280.

   ***CAUTION:*** *Possible damage to the electrocardiograph may occur if a telephone cable is connected to the LAN connector.*

   2. Select from the real-time display.

3. Select **Advanced.**
4. Select **LAN.**
5. Addresses are always entered as 4 sets of 3 digits therefore an address of 192.168.0.7 must be entered on the ELI 280 as 192.168.000.007.
   a. LAN/WLAN settings may be password protected when printing the configuration. If the password is entered, users will be able to view these settings on the screen; however, all printouts will print "****" instead of the actual values.
6. Select **Done.**

### Ethernet Transmission Status Indicator LEDs

The operator can monitor LAN interface connection and data transmission by observing the LEDs (Light Emitting Diodes) located at the system's external connector. The LEDs can be viewed from the outside (rear) of the ELI 280.

| LED LOCATION | STATUS | INDICATES |
|---|---|---|
| Left LED | Dark | ELI 280 is in the Off state. |
| Left LED | Illuminated | Network link is detected, ELI 280 is On or in Stand-by. |
| Right LED | Flashing | When transmit or receive network traffic is detected. |

***NOTE:*** *The ELI 280 LAN will support 10 and 100 MBPS networks.*

## Wireless Local Area Network (WLAN) Connection and Setup

***NOTE:*** *WLAN functionality can be confirmed by the presence of the WLAN icon in the Settings menu.*

The facility Information Technology (IT) professional must:

- Configure the wireless access point(s).
- Configure the E-Scribe workstation.
- Provide the ELI 280 WLAN configuration values.

To set up the ELI 280 for WLAN transmission:

1. Select from the real-time display.

2. Select **Advanced.**

3. Select **WLAN.**

4. Configure the ELI 280 for Dynamic Host Communication Protocol (DHCP) or static IP. Wireless security encryption options include:

   - WEP
   - WEP 128
   - WEP 64
   - WPA-PSK
   - WPA–LEAP
   - WPA-PSK64
   - WPA-PSK128
   - WPA-LEAP64
   - WPA-LEAP128
   - WPA2-PSK
   - WPA2-PEAP
   - WPA2-EAP-TLS
   - WPA2-EAP-TLS(p12/pfx)

   ***NOTE:*** *Environmental conditions may affect the reliability of WLAN transmissions. Set or change the WLAN Connect setting from the Settings menu.*

If DHCP is set to NO, your wireless access point will have a static network setting and the following parameters must be configured in the device:

- IP Address
- Default Gateway
- Sub Net Mask

If DHCP is set to YES, your wireless access point will have an automatic network setting and IP address. The default gateway and sub net mask do not need to be configured.

In either DHCP setting, the following wireless network parameters must be provided by the IT professional:

- Host IP
- Port Number
- SSID
- Channel Number
- Password or passphrase

***NOTE:*** *Addresses are always entered as 4 sets of 3 digits; therefore, an address of 192.168.0.7 must be entered on the ELI 280 as 192.168.000.007.*

If WEP wireless security is disabled on your access point, then set security (WEP) to None.

If WEP wireless security is enabled on your access point, the following wireless network parameters must be configured in the device by the IT professional:

- Security: WEP
- WEP Key
- WEP Key ID

***NOTE:*** *The range for the WEP key is 0-3. If the range on your access point is 1-4, then 0 at the ELI 280 maps to 1 on the access point; 1 maps to 2 on the access point, etc.*

If your wireless security environment is WPA or WPA2 (Wi-Fi Protected Access) then enter the following:

- Security: WPA-PSK or WPA2-PSK
- Passphrase:

***NOTE:*** *The passphrase length is limited to 64 digital Hex Value characters or 63 ASCII characters.*

If your wireless security environment is LEAP then enter the following:

- Security: WPA-LEAP or WPA2-PEAP
- LEAP or PEAP User Name
- LEAP or PEAP Password

***NOTE:*** *LEAP user name and password are limited to 63 characters.*

***NOTE:*** *Allow the ELI 280 several seconds to complete saving the WLAN configuration.*

## Transmission Media Auto-Sync

The ELI 280 automatically identifies the default transmission media. Connectivity options which have been optionally purchased and installed will be available for default selection. The electrocardiograph will automatically detect the communication device and automatically connect to it.

# USB Connectivity

## Transmission using the USB host port to a USB memory stick

USB memory communication media permits storage of patient records to an external USB memory stick. The files will be saved in UNIPRO32 format for transfer to the E-Scribe or a compatible electronic information management system.

> ***NOTE***: *Device is compatible with FAT32 formatted USB memory sticks.*
>
> ***NOTE***: *The USB memory stick must not contain any automatic features (e.g., Sandisk U3). Uninstall any features from the memory stick before connecting it to the device.*
>
> ***NOTE***: *All communication options (MODEM, LAN, WLAN) including time sync and orders download are disabled when a USB memory stick is inserted in the device.*
>
> ***NOTE***: *Upon successful transmission the device display will state "Transmission status transmit complete. Press any key to continue." The total number of patient records transmitted to the USB memory stick will also appear.*
>
> ***NOTE***: *Patient records transmitted to a USB memory stick are marked as transmitted by the device.*

### Transferring Individual Patient Records to the USB Memory Stick

- Place the USB memory stick into the USB host port on the back of the device.
- Select from real-time ECG view.
- Select **Directory**.
- Select the patient record to be stored to the USB memory stick.
- Select **Transmit**.

### Transferring Batch Patient Records to the USB Memory Stick

- Place the USB memory stick into the USB host port on the back of the device.
- Select **SYNC**.
- Select **Done** when transmission is complete.

## Transmission using the optional USBD (device) port to a PC

The USBD port permits transmission of stored patient records to a PC using a direct USB cable. The patient records will be transmitted to an ELI Link application (requires V3.10 or later) and then exported and saved in various formats (see the ELI Link user manual).

## Connecting the ELI 280 to a PC

When connecting the device to a PC for the first time, the proper USB driver will need to be installed prior to use.

- Use a USBD cable to connect the device to a PC.
- When properly connected, the PC will automatically detect the device and automatically install the drivers.
- You will be required to power the ELI 280 on by pressing the On/Off button for a period of three seconds.

### Transmitting Patient Records to ELI Link

- Create both an Input folder and Output folder on the PC.
- Configure ELI Link to the individual Input and Output folders.
- Connect the ELI 280 to the PC.
- "USB Device ready" will appear on the device display; a "Removable Disk" message will display on the PC.
- Using the PC mouse, select **Records** from the removable disk window displayed on the explorer window.
- Select the patient record(s) to be copied.
- Place the copied record(s) into the Input folder on the PC.
- After a period of 5 seconds, select the copied record(s) to view on the PC or print via PDF from the Output folder.

  ***NOTE**: Requires ELI Link V3.10 or later. See ELI Link user manual for further detail on settings.*

  ***NOTE**: User must create an Input and Output folder for records to be stored or retrieved for use in ELI Link.*

  ***NOTE**: Patient records transmitted to ELI Link are not marked as transmitted by the device.*

  ***WARNING:** Do not change or modify any information existing in any of the ELI 280 folders that are visible on the PC in the removable disk file.*

  ***CAUTION:** To assure consistent operation and avoid confusion, connect only one ELI 280 using the USB device port to a PC at a time.*

- Unplug the USBD cable and power the ELI 280 On.

# ECG DIRECTORY

## ECG Directory

The standard ECG directory saves up to 40 individual ECG records. The optional expanded memory permits up to 200 ECGs to be stored.

To access the ECG directory, select from the real-time display, followed by **Directory.**

Sort the directory by Name or ID by touching the header of choice.

Use the double arrows (◀◀ or ▶▶) at the bottom of the screen to move page by page through the list of acquired ECGs. The number of pages, as well as the current page, displays to the left of the double arrows.

When a patient from the directory is selected, a second window (sub directory) will display all of the ECG records stored in the directory for that patient, along with the date and time of each acquisition. Records that have been printed, transmitted, or deleted will be indicated by a √ in the appropriate column.

> ***NOTE:*** *Records are automatically deleted through a first in-first out process when the maximum number of records has been reached.*
>
> ***NOTE:*** *A password may be required before entry into the ECG directory. Obtain the password from the department Administrator.*
>
> ***NOTE****: Select at any time it appears to return to the real-time display.*

## Searching ECG Records

To search the directory by patient name:

1. Select from the real-time display, followed by **Directory.**
2. Select the Name column header.
3. Select **Search Worklist** and a touchscreen keyboard will appear.
4. Use the touchscreen keyboard to enter the first few letters of the last name and move to the general location of the desired patient record, or continue typing the patient name to obtain a closer proximity. Use **Cancel** to return to the directory without using the search feature.
5. Select the patient's name from the presented list. Use **Back** to return to the directory.
6. To search by ID, DOB or Last ECG, select the desired column header before selecting Search Worklist.

   To exit the directory, select **Done**. Select Done again to return to the real-time display.

   ***NOTE:*** *Use the double arrows (◀◀ or ▶▶) at the bottom of the screen to move page by page through the list of acquired ECGs. The number of pages, as well as the current page, displays to the left of the double arrows.*

## Reviewing ECG Records

To review an existing patient ECG record:

1. Select from the real-time display, followed by **Directory**.
2. Navigate to the desired patient record, and select.
3. Select the desired acquired ECG from the sub directory.
4. Once selected the acquired ECG will display.
5. To change the format of the acquired ECG touch the display and select the desired settings for Print Format, Print Speed, Print Gain, Print Filter and Pacer channel**.**
6. Select **OK** to save and return to ECG display, or **Cancel** to exit without saving.
7. To view the interpretation, select ▶▶. Select ▶▶ again to return to the displayed ECG.
8. Select **Print** to print the acquired ECG; use **Stop** to stop printing. To transmit the acquired ECG use **Send**; to delete use **Erase.**
9. Select **ID** to enter or edit demographic information (if required) after ECG acquisition.
10. Select **Back** to return to the sub directory. Select Back again to return to the ECG directory.

To acquire an additional ECG using the existing demographics:

1. Navigate to the sub directory for the desired patient.
2. Select **New ECG** followed by **Done.**
3. To acquire the new ECG, select . Once completed, the acquired ECG displays on a red grid background.
4. Change the format by touching the display and selecting the desired settings for print format, print speed, print gain, print filter, pacer channel and Best 10/Last 10. Select OK or Cancel to save or discard the changes. With the tracings displayed you can select print, send, or erase the new ECG record.
5. Use **Done** to save the new record and return to the sub directory.

## Deleting ECG Records

Management of the ECG record is performed within the sub directory of stored ECGs. The desired record must be selected in order to view, print, edit or add demographics, or erase the record.

An ECG may be stored in the directory but have a "deleted status" (indicated by "√" in the column under deleted but in the same row as the name). The directory saves records marked for deletion in the event that the record needs to be reviewed or printed at a later time.

> ***NOTE**: Records are automatically marked for deletion based on the delete rule configuration.*

Stored ECGs will remain in the directory until the memory becomes full. Only those records that have been marked for deletion will be removed when necessary to store a newly acquired ECG.

## Erasing ECGs from the Directory

1. Select from the real-time display, followed by **Directory**.
2. Navigate to the desired patient record and select. All acquired ECGs for that patient will display.
3. Select **ERASE ALL** to erase all of the ECGs in the selected patient record, or
4. Select the desired ECG from the patient record followed by **ERASE**.

## Printing the ECG Directory

1. Selecting **Print** from the bottom of the ECG directory display will generate a printout of the entire ECG directory (up to 200 records; 40 records per page). Use **Stop** to stop printing.
2. Select **Done** to return to the Patient Demographics page; select Done again to return to the real-time display.

## ECG Orders

The ECG Orders (MWL) directory saves up to 256 ECG pending orders. Orders are displayed with name, ID, patient location, patient room number, and date/time of order.

The Orders menu allows the user to download or print orders, as well as load a query for a certain location in the facility. Sort, navigate and/or search ECG Orders in the same manner as the ECG Directory.

> ***NOTE:** Each time orders are downloaded the ELI 280 will automatically refresh the orders list. Orders that have been executed, canceled or deleted will be automatically eliminated.*

## Searching ECG Orders

To search the directory by patient name:

1. Select from the real-time display, followed by **MWL.**
2. Select the Name column header.
3. Select **Search Worklist** and a touchscreen keyboard will appear.
4. Use the touchscreen keyboard to enter the first few letters of the last name and move to the general location of the desired patient record, or continue typing the patient name to obtain a closer proximity. Use **Cancel** to return to the directory without using the search feature.
5. Select the patient's name from the presented list. Use **Cancel** to return to the Search function. Use **OK** to return to the real-time display and acquire an ECG for the selected patient, or use **Edit** to edit the patient demographics for the selected patient. When editing is complete, use **Done** to return to the real-time display and acquire an ECG for the selected patient.
6. To search by ID, Location, Room, or Date/Time the order is scheduled to be performed, select the desired column header before selecting Search Worklist.
7. To exit the directory, select **Done**. Select Done again to return to the real-time display.

   ***NOTE:*** *Use the double arrows (◀◀ or ▶▶) at the bottom of the screen to move page by page through the list of orders. The number of pages, as well as the current page, displays to the left of the double arrows.*

   ***NOTE:*** *The ELI 280 will maintain the last selected queried location used in the search process to help expedite work flow.*

   ***NOTE:*** *When reviewed, the selected order will display the scheduled date and time of the order at the right of the demographics.*

## Worklist Management

The ELI 280 can download and process ECG order lists from the E-Scribe or another compatible information management system which identifies the ECG(s) (or ECG orders) needed for particular patients. Implementation of an order-based workflow can significantly reduce demographic data-entry errors at the electrocardiograph. Orders are deleted from the list when the ordered ECG is acquired, and the MWL listing is refreshed.

## Sync Command

Use

to transmit an acquired ECG to a cardiology management system, transmit and request a download of the MWL, or transmit, request a download of the MWL and synchronize the date and time.

***NOTE:*** *This device supports automatic time synchronization with a remote server. Inaccurate time/date settings can result in ECGs marked with inaccurate time stamps. Confirm the accuracy of the synchronized time prior to acquiring ECGs.*

## MWL Query

MWL query codes may uniquely identify a location or department. Query codes may be assigned to a staff member or an electrocardiograph. Use the Query Code drop-down menu from the ECG Orders directory to select orders specific to that query code or location.

Once a query code is selected it will serve as the default query code for that particular ELI 280, or until a different selection is made. Select **None** to erase the last query code used.

## Custom ID Download

Custom ID formats are uniquely defined by your facility's needs. This customized ECG header information is designed in ELI Link or an E-Scribe system and downloaded to the ELI 280.

To download and set a Custom ID format:

1. Select from the real-time display.

2. Select **Custom ID.**

   ***NOTE**: Alternatively, select Advanced from the Configuration menu followed by selecting Custom ID. (A password is required to enter Advanced settings.*

3. "Attempting Network Connection" will display followed by "Connected," and finally "Custom ID downloaded."

4. Select **Done** to return to the Configuration menu; select Done again to return to the real-time display.

5. The Custom ID is retained for all future ECGs until a different ID format is downloaded, or Short or Long format is selected from the Settings menu located under System. The set Custom ID format will not be lost due to power loss or failure, or when switching to a different ID format.

6. Set the ID format configuration to short, long, or custom depending on the facility's patient demographic-entry needs.

   ***TIP:** Upon Custom ID download, the ID format will assume the demographic layout as designed in ELI Link or E-Scribe.*

   ***NOTE:** The site number must be configured in the electrocardiograph and recognized as an established, valid site number in ELI Link or E-Scribe before downloading the Custom ID.*

   ***TIP:** Communication configuration parameters must be set before downloading the Custom ID from ELI Link or E-Scribe.*

# Patient Demographic Query (PDQ)

The ELI 280 can query the EMR for patient demographic information via HL7 A19 using the input of up to three demographic criteria (ID, First Name, Last Name, or any combination of the three fields) for those institutions performing unordered ECG tests, or do not have an interface to an electronic ordering system.

The ELI 280 performs a query based on the information input into the search fields. The more specific the information input into the fields, the narrower the search. It is best practice to input as specific information as possible to return the most specific result.

The PDQ feature may be enabled and used in combination with DICOM, or in an order-based environment.

## Performing a PDQ:

1. Select from the real-time ECG display, and then select the **PDQ** button.
2. Enter the ID, first name, last name, or any combination, then select SYNC.
3. When a single patient match is found, the ID screen is populated with the demographics of the result, otherwise all patients matching the search criteria are listed.
4. Select the appropriate patient from the list if more than one option is available.
5. Select **Done** to proceed to the real-time ECG display for ECG acquisition.

## Performing a PDQ with a barcode scanner:

1. While on the real-time ECG display, scan the patient barcode. The ELI 280 will automatically search for an open order downloaded to the device, then it will search the list of ECGs stored on the device for a patient that matches the field scanned, and if no patient is found, a patient demographic query using the entry scanned is prompted.
2. When a single patient match is found, the ID screen is populated with the demographics of the result, otherwise all patients matching the search criteria are listed.
3. Select the appropriate patient from the list if more than one option is available.
4. Select **Done** to proceed to the real-time ECG display for ECG acquisition.

## Search Tools

The following are tools to assist in searching for the appropriate patient following a patient demographic query:

- Sort the results by **Name**, **ID**, **Location**, **Room**, or **DOB** by a tap on the column header. A second tap will sort the list in reverse order.
- Use the double arrows (<< or >>) at the right center of the screen to move page by page through the list of patients. The current/total number of pages is displayed between the double arrows.

***NOTE:*** *The PDQ feature on the ELI 280 may be used when enabled and the interface configured. See the ELI Link manual for information regarding setup and configuration of the interface.*
***NOTE:*** *When no match for a patient is found after a PDQ, the unit will remain in the Transmission Status screen until the user selects Done.*

# SYSTEM SETTINGS

## Menu Commands and Utilities

To access system settings, select from the real-time display. Select **Advanced** for extended settings. Extended settings are password protected; the factory password is “admin”.

***NOTE**: Select at any time it appears to return to the real-time display.*

| UTILITY | DESCRIPTION | CHOICES | MENU |
|---|---|---|---|
| About | Presents the utility settings of the ELI 280. | • Serial Number<br>• Software version<br>• Interpretation<br>• Communication<br>• Memory Capacity<br>• Multi Protocol<br>• DICOM<br>• USB Device<br>• Stress<br>• PDQ<br>• LAN<br>• WLAN<br>• Modem<br>• LAN Mac<br>• WLAN Mac<br>• Bar Code Scanner<br>• Battery Voltage<br>• Security | |
| Advanced | Gives access to the extended configuration menus | | |
| Custom ID | Downloads a Custom ID from a compatible information management system. | • ELI Link<br>• E-Scribe system<br>• Compatible information management system | |
| Date/Time | Sets the date and time in the appropriate time zone. | • Time zone<br>• Daylight savings | |
| WAM/AM12 | Presents the option to activate and the utility necessary to use the WAM. | • Synchronize (pair) the WAM with the ELI 280<br>• Change acquisition module to AM12. | |
| TEST WLAN | Tests the strength of the radio frequency (RF) signal of the ELI 280 to the wireless network. | | |
| System | Presents the following system setting utilities. | • Language<br>• Volume<br>• ID Format<br>• Units for Height<br>• Units for Weight<br>• Communication Protocol<br>• Caps Lock<br>• Transmitted Edit Disable<br>• Barcode date Format<br>• Cart Number | ADVANCED |

| UTILITY | DESCRIPTION | CHOICES | MENU |
|---|---|---|---|
| | | • Site Number<br>• Site Name<br>• Second Site<br>• Second Site Number<br>• Third Site Number<br>• Third Site Name<br>• Output Date Format<br>• XMT Mandatory Fields (ID, Last Name, Tech ID)<br>• Sync Mode<br>• File Encryption Key<br>• Delete Timeout<br>• Communication Encryption Key<br>• User Authentication<br>• Auto Log Off (minutes) | |
| ECG | Default settings for ECG-related parameters. | • Various parameters | ADVANCED |
| LAN | Set the parameters needed for the Local Access Network. | • Various parameters | ADVANCED |
| WLAN | Set the parameters needed for the Wireless Local Access Network. | • Various parameters | ADVANCED |
| Modem | Set the parameters required for the modem. | • Various parameters | ADVANCED |
| Password | Administrator enters and changes passwords to limit access to the configuration menus, ECG directory, and/or orders/work list. | • ECG Technician password<br>• Administrator password | ADVANCED |
| Service | Allows qualified personnel access to Service utilities. | • Calibration Cue<br>• Auto Test<br>• Firmware<br>• Config File<br>• Options File<br>• Owner Name<br>• Dump Logs<br>• Dump Records<br>• Erase Records<br>• First Time Boot<br>• Writer Test<br>• Test Config.<br>• Clear flags<br>• Fill Directory<br>• IIR On | ADVANCED |
| Print | Prints the configuration of the ELI 280. | | |
| Done | Exits the utility and saves the setting. | Returns to the previous menu screen | |
| Home | Exits the menu. | Returns to the real-time display | |

# Device Passwords

The device's Administrator password controls several functions and should be created and secured with care. Log the Administrator password in a location where it can be accessed during an emergency as well as in a backup location in case the primary location is compromised. The ELI 280 is preset with the case-sensitive Administrator password "admin." To change the Administrator password, see *Setting Passwords*.

The Administrator password enables:

a. Access to the Configuration menu which controls all other passwords.

b. Creation of a new password that can be required to access the Set Password function.

c. Creation of a technician-level password that can be required to access the ECG or MWL directories.

## Setting Device Passwords

To set or change the ELI 280's Administrator and Technician passwords:

1. Select from the real-time display.

2. Select **Advanced** followed by **Passwords**. (A password is required to enter Advanced settings.)

3. Touch the appropriate password field and use the touchscreen keyboard to enter the new password. Retype the new password in the appropriate Confirm field.

4. Select **Done** to save and return to the Configuration menu, or **Cancel** to return without saving.

   ***NOTE:*** *Factory preset password is "admin".*

   ***NOTE:*** *Passwords are case sensitive.*

   ***NOTE:*** *Technician password allows for entry into the ECG or MWL directories only if selected.*

# Configuration Settings: About

## Serial Number

This indicator allows the user to see the serial number of the electrocardiograph.

## Software Version

This indicator allows the user to see the software version of the electrocardiograph.

## Interp

This selection allows the user to see whether automatic ECG interpretation is available on the device.

## Memory Capacity

This indicator allows the user to see the storage capacity that the electrocardiograph currently possesses. The standard capacity is 40 records. The expanded capacity (optional) is 200 records.

## Multi-Protocol

This utility is most frequently used in pharmaceutical research facilities. It allows the user to simultaneously run up to three protocols.

## DICOM

This indicator allows the user to see if DICOM bidirectional communication is available.

## USB Device

This indicator allows the user to see if the ability to transmit data using a USB device if available.

## Stress

This indicator allows the user to see if the device supports Stress testing.

## LAN

This indicator allows the user to see if Ethernet Local Area Networking is available on the device.

## WLAN

This indicator allows the user to see if Wireless Local Area Networking is available on the device.

## Modem

This indicator allows the user to see if a Modem is available on the device.

## LAN MAC

This indicator allows the user to see the Local Area Network MAC address.

### WLAN MAC

This indicator allows the user to see the Wireless Local Area Network MAC address.

### Bar Code Scanner

This indicator allows the user to see if a bar code scanner can be used with the device.

### Battery Voltage

This indicator allows the user to see the ELI 280's current battery voltage.

### Security

This indicator allows the user to see if the Security features are enabled:

- Network User Authentication
- User Roles
- Encryption of Stored Data

### Patient demographic Query

This indicator allows users to query an EMR for patient demographic information

## Configuration Settings: Modem

### Telephone Number

This control allows the user to set the telephone number for internal modem transmission to another unit or to an E-Scribe system. The utility can accommodate up to 45 alphanumeric characters.

> ***NOTE****: Some systems may require the system to dial a* ***9*** *to get an outside line. Some systems may require the system to wait for an additional dial tone. In this case use the letter* ***W****. See below example.*
>
> EXAMPLE: 9**W**14145554321

To insert a pause use a comma (**,**).
To change tone dialing to pulse dialing, use the letter **P**.

> EXAMPLE: **P**14145554321

(If necessary, use both the letter **W** and the letter **P** in the same phone number.)

## Configuration Settings: System

Follow these steps to change the ELI 280 system settings:

1. Select from the real-time display. (Enter password if required.)
2. Select **Advanced**, followed by **System**. (A password is required to enter Advanced settings.)
3. Make the appropriate configuration changes.
4. Select **Done** to save and return to the Configuration menu, or select **Cancel** to return without saving

### Language

There are several languages available on the electrocardiograph.

***CAUTION:*** *Function labels are immediately translated upon selecting a new language and exiting the configuration screen.*

### Volume

This control sets the loudness when a key on the touchscreen keyboard is pressed. Available settings are Off, Low and High.

### ID Format

This control allows the user to define the format for the patient demographic information field prompts. There are three available formats: short, long and custom. A Custom ID format can be downloaded from ELI Link or an E-Scribe system.

The short format contains the patient's last name, patient's first name, ID number, birthdate, age and sex. The device automatically calculates the patient's age when the birthdate is entered.

The long format contains the patient's first name, patient's last name, ID number, age, height, weight, sex, race, medications, location, room, and comment fields.

### Unites for Height

This selection allows the user to set the units of measure to inches (in) or centimeters (cm).

### Units for Weight

This selection allows the user to set the units of measure to either pounds (lb) or kilograms (kg).

### Communication Protocol

This control allows the IT professional to set the communication protocol to UNIPRO32, DICOM32, or DICOM32ext.

> ***NOTE:*** *This setting must be entered under the direction of the IT professional at the facility where the device is installed.*

### Caps Lock

All character entry is translated to uppercase.

### Transmitted Edit Disable

When set to Yes, the ELI 280 will not allow an ECG's demographics to be changed after it has been transmitted.

### Barcode Date Format

Distinguishing between months and days in formatted date strings is not always possible. When a barcode scanner is used to read dates, this setting specifies if dates are in MM/DD (month/day) or DD.MM (day.month) format.

### Cart Number

This control allows the user to assign an ELI 280 with a cart number from 0 to 65535 in order to identify which device acquired or transmitted a particular ECG.

### Site Number

This control allows the user to specify the location of the ELI 280 using a site number. Site numbers designate the department, nursing unit, hospital, clinic, or institution for ECG records stored in an E-Scribe or approved third-party cardiology management system and must be defined for transmitting and retrieving ECGs from that system. Up to four digits (0–4095) are supported to assign a site number. Up to three sites can be defined when multi protocol is enabled.

### Site Name

This control allows the user to name the department, nursing unit, clinic, hospital or office where the ELI 280 is located. The site name prints at the bottom, left edge of the ECG printout. Use up to 30 alphanumeric characters for the name. Up to three sites can be defined when multi protocol is enabled.

### Output Date Format

This control allows the user to define the date of birth format output to an E-Scribe in a custom ID.

### Mandatory Fields

These controls specify if the patient's ID, patient's last name, and/or the technician's ID must be valued before an ECG can be transmitted.

### Sync Mode

This control allows the user to set the transmission option when synchronizing with the electronic medical record system. Synchronization can be set to None, Transmit, Transmit+Orders, or Transmit+Orders+Date/Time.

> ***NOTE:*** *This device supports automatic time synchronization with a remote server. Inaccurate time/date settings can result in ECGs marked with inaccurate time stamps. Confirm the accuracy of the synchronized time prior to acquiring ECGs*

## File Encryption Key

If the Security Option is enabled then all stored files with patient and configuration information are encrypted with the 256-bit Advanced Encryption Standard (AES). The File Encryption Key is used to encrypt the patient and configuration information. If the File Encryption key is modified then all encrypted files are re-encrypted using the new key. The Encryption Key cannot be blank. The Key can be up to 16 alphanumeric characters. Once the Security Option is enabled and the stored files are encrypted there is no way to return the stored files to an un-encrypted state.

If the device is booted and the configuration file is missing, a new configuration file will be generated with the default configuration settings with the exception of the administrator and technician passwords. The administrator and technician passwords will be set to random strings unknown to the user. The File Encryption Key can be used as the administrator password to reset these passwords.

## Delete Timeout

ECGs marked for deletion are still maintained in the device's non-volatile memory until the memory is needed to store new ECGs. The oldest ECGs are deleted to make room for the newest ECGs. If the local records retention policy requires ECGs to be removed from memory sooner, this setting can be used to specify the number of days to keep the ECGs prior to automatic deletion. Set to 0 days to delete the ECGs once they meet the criteria to be marked for deletion.

The value can be set from any numeric value from 0 days to 9999 days.

## Communications Encryption Key

If the Security Option is purchase then the device encrypts its communication with ELI Link to keep sensitive information private. The transmitted data is encrypted with the 256-bit Advanced Encryption Standard (AES). Leaving the key blank results in the device using the default encryption key built into ELI Link. If the local security policy requires use of alternate keys, configure the same key in the device and ELI Link. The key can be up to 16 alphanumeric characters.

## User Authentication

This setting specifies how the ELI 280 should authenticate individual users.

| | |
|---|---|
| **Off** | This turns off user authentication. The ELI 280's Technician and Administrator passwords may be used to protect access to orders, stored ECGs, and the configuration settings. |
| **Local** | This allows the user to enter a User Name so the device will prepopulate the Technician field when performing new ECGs, but no authentication of the user is performed against network credentials from another system. The user must enter the ELI 280's Technician or Administrator password to obtain the respective permissions. |
| **Network** | This mode authenticates users over the network using Active Directory or LDAP and determines their permissions according to security group membership as configured in ELI Link. |

***NOTE:*** *The LDAP or Active Directory domain for the user accounts and the security groups that are considered ELI technicians and administrators are configured in ELI Link and are not configured or stored on the ELI 280.*

User roles are configured in ELI Link by configuring the security whose members are considered guests, technicians or administrators.

When the ELI 280 is configured for user authentication, it displays a role icon on the main screen.

**Anonymous Guest** – the user has not been authenticated. The unknown guest may only acquire new ECGs by manual entry of patient demographics. Their User Name will not be prepopulated into the Technician field of new ECGs.

**Known Guest** – the user has been authenticated on the network with their User Name and Password, but the user has not been granted Technician or Administrator permissions. The user has all capabilities except access to advanced configuration items, directory, MWL and real time sync. The user may only acquire new ECGs by manual entry of patient demographics. The Known Guest User Name will be prepopulated into the Technician field of new ECGs.

**Technician** – the user has been authenticated on the network with their User Name and Password, and the user has been granted Technician permissions. In addition to Guest permissions, this user may also view orders and stored ECGs.

**Administrator** – the user has been authenticated on the network with their User Name and Password, and the user has been granted Administrator permissions. In addition to Technician permissions, this user may also change the ELI 280's settings.

### Auto Log Off

When user authentication is used, this setting specifies the number of minutes the ELI 280 may remain idle before it automatically logs the user off. The device is idle when there is no patient connected and the screen is off. The user may manually put the device into an idle state by lightly pressing the power button.

An authenticated user may also log off manually at any time by selecting the Settings button from the main screen and selecting Log Off.

***Note**: The device is not considered idle and will not automatically log off the user when a patient is connected.*

## Configuration Settings: ECG

### AC Filter

This selection allows the user to remove 60 Hz or 50 Hz interference on the ECG trace. The setting selected depends on the line frequency in the host country. Always use the 60 Hz setting in the U.S. If AC interference is frequently present on the ECG signal, make sure the proper AC filter frequency has been selected.

### Filter

This selection allows the user to select the appropriate filtering for the desired trace results. The band-pass filter that is selected attenuates higher frequency noise and affects the fidelity of the electrocardiograph as viewed on the display and on the printed hard copy. The filter setting is printed at the bottom right corner of the ECG printout, and may also be viewed on the upper right-hand corner of the real-time display. Settings include:

1. The 40 Hz print-filter (0.05 to 40 Hz) setting reduces the noise from frequencies above 40 Hz.
2. The 150 Hz print-filter (0.05 to 150 Hz) setting reduces the noise from frequencies above 150 Hz (default).
3. The 300 Hz print-filter (0.05 to 300 Hz) setting reduces the noise from frequencies above 300 Hz. This setting provides the least filtering and highest fidelity ECG signal to the printed and displayed ECG; this setting is recommended for pediatric ECG's.

***WARNING:*** *When the 40 Hz filter is used, the frequency response requirement for diagnostic ECG equipment cannot be met. The 40 Hz filter significantly reduces high-frequency components of the ECG and pacemaker spike amplitudes, and is recommended only if high-frequency noise cannot be reduced by proper procedures.*

***NOTE****: The plot-frequency filter does not filter the digitized signal acquired for interpretation of the ECG.*

***NOTE****: The Filter setting can also be changed for a single ECG by touching anywhere on the ECG waveform in the real-time or acquired view.*

## Interp

This selection allows the clinician to turn the ECG interpretation statements On/Off for presentation on the display and/or plotted report.

***NOTE:*** *The ECG interpretations offered by the device are intended to be most relevant when used in conjunction with a physician over-read and with consideration of all other relevant patient data.*

## Reasons

This selection allows the clinician to include additional information about the ECG interpretation on the printout. Reasons statements are specific details that indicate why a particular interpretive statement was chosen. Reasons statements print in brackets [ ] within the interpretive text. Reasons are only available if the interpretation statements option is enabled. Turning the reasons statement function ON or OFF does not affect the measurements criteria or the interpretive statement selected by the analysis program.

**For Example:**

Anteroseptal Infarct [40+ ms Q WAVE IN V1-V4]

"Anteroseptal Infarct" is the interpretive statement.
"40+ ms Q WAVE IN V1-V4" is the reason statement explaining the interpretive statement.

## Append

This selection allows the user to add a status message or statement phrase to the ECG to be printed under the interpretive text printout. The choices are "UNCONFIRMED REPORT" or "Reviewed by."

## Delete Rule

The Delete Rule allows the user to define how and when ECGs are automatically marked for deletion in the ECG directory. ECGs can be marked manually or marked for deletion per the Delete Rule. ECG records are only fully deleted from the directory when the directory becomes full. When the memory is full, ECGs that are marked for deletion will be automatically deleted based on their acquisition date and time (first-in/first-out) to make room for new ECG records. More than one ECG record may be removed from the directory to make room for the new incoming record.

The Delete Rule selections are:

1. Post Plot = ECG is automatically marked for deletion afterprinting
2. Post Transmit = ECG is automatically marked for deletion after transmission
3. Post Plot/Transmit = ECG is automatically marked for deletion after transmission and printing

***NOTE:*** *A record may be permanently deleted by selecting the record, followed by selecting Erase from the left side of the display. A window will be presented as "Erase ECG?" If you select Yes the record will be permanently erased. If you select No the record will be maintained in the file.*

### Average RR/QTcB/QTcF

Enabling this option will allow the following to appear on the report:

- an averaged RR value.
- a Bazett's corrected QT value along with the default linear QTc value.
- a Fridericia corrected QT value along with the default linear QTc value.

### ECG Capture

Defines whether or not the ELI 280 will automatically display the Best 10 seconds of data acquired or the last 10 seconds of data acquired.

> ***NOTE****: The ECG Capture Mode can also be changed for a single ECG by touching anywhere on the ECG waveform in the acquired view.*

### Pace Spike Channel

This control allows the user to decide and set as a default, whether a pacemaker spike notification marker will display at the base of the ECG printout. A pacemaker spike notification marker coincides with each pacemaker event.

> ***NOTE****: The Pacemaker Spike Channel setting can also be toggled on or off for a single ECG by touching anywhere on the ECG waveform in the acquired view.*

### ECG Display Speed

This control allows the user to set the default display speed to 5 mm/s, 10 mm/s, 25 mm/s or 50 mm/s for ECG viewing.

> ***NOTE****: The Display Speed can also be changed for a single ECG by touching anywhere on the ECG waveform in the real time view.*

### ECG Print Speed

This control allows the user to set the default paper speed to 25 mm/s or 50 mm/s for ECG printouts.

> ***NOTE****: The Print Speed can also be changed for a single ECG by touching anywhere on the ECG waveform in the acquired view.*

### Number of Copies

This utility allows the user to select the number of printed copies that automatically print when an ECG is taken. A zero (0) setting prints no copies. Selecting one (1) prints the original copy, two (2) prints the original plus one copy, and so on up to 9 copies.

### Copies with Interpretation

This utility allows the user to select the number of printed copies containing interpretation when an ECG is taken. A zero (0) setting prints the first ECG with interpretation and all consecutive copies up to nine (9) printed without interpretation. Settings from one (1) to nine (9) contain an ECG interpretation on that number of selected printed copies. All copies display patient demographics and measurements.

## Cabrera

Defines whether or not the ELI 280 will automatically display the ECG in the Cabrera format. The Cabrera format displays the limb leads in the order aVL, I, -aVR, II, aVF, III, instead of the standard I, II, III, aVR, aVL, aVF, allowing a different presentation of waveform progression in the vertical plane.

## Plot Format

This control allows the user to set the default for one of the available print formats in either standard or Cabrera presentation. Regardless of the print format selected, 10 seconds of 12 leads are always stored.

ECG print options are:

| Format Option in 12-lead mode | ECG Data |
|---|---|
| 3+1 | 2.5 seconds of 12 leads in a 3-channel format, plus 10-second rhythm strip of one user-selectable lead in a 1-channel format. |
| 6 | 5 seconds of 12 leads in a 6-channel format. |
| 3+3 | 2.5 seconds of 12 leads in a 3-channel format, plus 10-second rhythm strip of user-selectable leads in a 3-channel format. |
| 12 | 10 seconds of 12 leads in a 12-channel format placing one lead over the other. |
| 6+6 | 10 seconds of 12 leads in a 6-channel format. |

***NOTE**: The Print Format can also be changed for a single ECG by touching anywhere on the ECG waveform in the acquired view.*

## 3 + 1 Rhythm Lead/3 + 3 Rhythm Leads

These settings allow the user to select the three lead configurations for the 10-second Rhythm Leads for the 3+1 channel and 3+3 channel ECG printout.

***NOTE:** Rhythm acquisition is not stored in memory, only printed.*

***NOTE:** See Record an ECG to acquire a rhythm printout.*

## Rhythm Print Speed

This control allows the user to set the print speed to 5 mm/s, 10 mm/s, 25 mm/s, or 50 mm/sec.

### Rhythm Formats

This control allows the user to set the default values for rhythm printing. Set the default rhythm format to 3, 6, 8 or 12-channel printing.

> ***NOTE****: The Rhythm Print Speed and Format can also be changed for a single ECG by touching anywhere on the ECG waveform in the real time view.*
>
> ***NOTE:*** *if Rhythm Format selection is either 3- or 6- Channel selection of the Lead button during rhythm printing stops and starts the printing and display of the lead sets in the following order:*
> *For 6 channel Format:*
> *d) Configured set*
> *e) I – aVF*
> *f) VI – V6*
> *For 3 channel Format:*
> *f) Configured set*
> *g) I – III*
> *h) aVR – aVF*
> *i) V1 – V3*
> *j) V4 – V6*

## Configuration Settings: LAN

All parameters related to network connection must be entered under the direction of a qualified IT professional of the facility where the device is installed.

### DHCP

This utility allows the IT professional to define whether the Dynamic Host Communication Protocol (DHCP) will be used to obtain an IP address.

If DHCP is YES, the network will automatically and dynamically assign an IP address.

If DHCP is NO, the IT professional must enter the IP address, def gateway, and sub net mask.

### IP Address

This utility allows the IT professional to enter the fixed IP address for network transmission (if DHCP is not selected).

### Def Gateway

This utility allows the IT professional to enter the address of the default gateway (if DHCP is not selected).

### Sub Net Mask

This utility allows the IT professional to enter the sub net address (if DHCP is not selected).

### Sync IP

This utility allows the IT professional to enter the IP address of the host server.

> ***NOTE:*** *Addresses are always entered as 4 sets of 3 digits; therefore, an address of 192.168.0.7 must be entered as 192.168.000.007.*

### Port Number

This utility allows the IT professional to enter the port number used by the host server.

## Configuration Settings: WLAN

### DHCP

This utility allows the IT professional to define whether the Dynamic Host Communication Protocol (DHCP) will be used to obtain an IP address.

If DHCP is YES, the network will automatically and dynamically assign an IP address.

If DHCP is NO, the IT professional must enter the IP address, def gateway, and sub net mask.

### IP Address

This utility allows the IT professional to enter the fixed IP address for network transmission (if DHCP is not selected).

### Def Gateway

This utility allows the IT professional to enter the address of the default gateway (if DHCP is not selected).

### Sub Net Mask

This utility allows the IT professional to enter the sub net address (if DHCP is not selected).

### SSID

Service Set Identifier (SSID) is the name of the wireless network. All ELI 280 electrocardiographs that will transmit to the same network must have the same SSID name. Touch the field to display the touchscreen keyboard.

### PSK Passphrase

The passphrase may be from eight to 63 ASCII characters or 64 hexadecimal digits (256 bits). Touch the field to display the touchscreen keyboard.

### Sync IP

This utility allows the IT professional to enter the IP address of the host server.

> ***NOTE:*** *Addresses are always entered as 4 sets of 3 digits; therefore, an address of 192.168.0.7 must be entered as 192.168.000.007.*

### Port Number

This utility allows the IT professional to enter the port number used by the host server.

### Security (WEP)

Wired Equivalent Privacy (WEP) is an encrypted security protocol (part of the 802.11 standard). Access points can have multiple WEP keys stored. Each one of them is identified by a number (e.g., 0, 1, 2, 3).

### WEP Key

This utility allows the IT professional to enter the WEP key number; valid range is 1-4.

### WEP Key ID

This utility allows the IT professional to enter the 128-bit WEP Key ID value (26 digits in 13 sets of two digits).

### WPA-PSK

WPA (Wi-Fi Protected Access) PSK (Pre-Shared Key) security allows for implementation of the “personal mode” of WPA. This mode of encryption employs Temporal Key Integrity Protocol (TKIP) which dynamically changes keys as the system is used.

### WPA-LEAP

Cisco® LEAP (Light Extensible Authorization Protocol) enables use of the device with wireless networks employing the LEAP encryption protocol.

### LEAP User Name

The LEAP user name can be up to 32 characters in length.

### LEAP Password

The LEAP password can contain up to 32 characters.

### WPA2-PEAP

Select this mode if the WLAN uses Protected Extensible Authentication Protocol.

### PEAP UserName

The PEAP username can contain up to 63 characters.

### PEAP Password

The PEAP password and contain be up to 63 characters.

### WPA2-EAP-TLS

Select this mode when the WLAN uses EAP-TLS and client-side X.509 certificates to authenticate devices. Insert a USB flash memory stick into the back of the ELI 280 that contains the X.509 certificate. Touch the **Certificates** button to enter the Select Certificates screen. Select the appropriate certificates for the Root Certificate File, Private Key File, and Client Certificate File fields. Touch the **Load Certificates** button to download the certificates.

### RADIUS UserName

The username can contain up to 64 characters.

### PEM Pass Phrase

The password can contain up to 64 characters.

## Configuration Settings: Date/Time

Selecting YEAR presents a touchscreen keyboard for entry of the correct year in a four character format i.e., 2012.

Selecting MONTH presents a drop-down window for entry of the correct month.

Selecting DAY presents a drop-down window for entry of the correct day. Using the arrows at the bottom of the list will advance you to the next level of selections.

Selecting HOUR presents a drop-down window for entry of the correct hour. Using the arrows at the bottom of the list will advance you to the next level of selections.

Selecting MINUTE presents a drop-down window for entry of the correct minute. Using the arrows at the bottom of the list will advance you to the next level of selections.

Selecting TIME ZONE presents a drop-down window for entry of the correct time zone. Using the arrows at the bottom of the list will advance you to the next level of selections.

Selecting DAYLIGHT SAVINGS TIME presents a drop-down window for entry of a Yes/No selection for automatic daylight savings time to be communicated from ELI Link or an E-Scribe.

## Configuration Settings: Custom ID

Selecting CUSTOM ID sets communication with ELI Link or an E-Scribe and downloads the Custom ID to the ELI 280.

> ***NOTE:*** *Custom ID must be configured in ELI Link or an E-Scribe.*

## Configuration Settings: Network

Selecting NETWORK establishes communication with the wireless network and displays up to five bars of signal strength. Presentation of the MAC Address, Firmware module, Radio Firmware, and IP address connected to will also be presented.

## Configuration Settings: WAM

Selecting WAM allows the clinician to switch between WAM or AM12 patient interface cables. For pairing of the WAM with the ELI 280, please refer to the WAM user manual.

## Configuration Settings: Service

Please refer to the Service manual for definitions and assistance with the Service functions.

# MAINTENANCE AND TROUBLESHOOTING

## System Troubleshooting Chart

| LCD Message | Problem | Correction |
|---|---|---|
| BATTERY LOW – CHARGE UNIT | Unable to acquire ECG or unable to print. | Charge the battery with AC power. |
| LEAD FAULT, NO ECG CAPTURE | Lead fail. | Correct faulty lead. |
| NO ANSWER | Unable to transmit ECG. | Check for correct phone number. Ensure modem is online. |
| | Device is not responding | Press and hold the On/Off button for 10 seconds. Calibration of the touchscreen display and re-entry of date and time will be required after this function. |

## ECG Troubleshooting Chart

| Affected Leads | Problem | Correction |
|---|---|---|
| LEADS OFF OR ONE OR MORE OF THE FOLLOWING: RA, LA, LL, V1, V2, V3, V4, V5, V6 | Lead fail. | Indication of RL/RA/LA/LL/V1/V2/V3/V4/V5/V6. Check limb leads.<br><br>Correct faulty lead(s). |
| Lead I and Lead II | Poor RA electrode or right arm tremor | Check patient prep; re-prep if necessary with new electrode. |
| Lead II and Lead III | Poor LL electrode or left leg tremor | Check patient prep; re-prep if necessary with new electrode. |
| Lead I and Lead III | Poor LA electrode, or left arm tremor | Check patient prep; re-prep if necessary with new electrode. |
| All | High Freq. Noise. | Adjust low pass filter setting; check proximity to power cables; check AC filter setting (50 Hz or 60 Hz). |

## Transmission Troubleshooting Chart

| LCD Message | Problem | Correction |
|---|---|---|
| TRANSMIT FAILED | Unable to transmit ECG. | Check phone line. Ensure site number is valid. Try again. |
| ERROR-DICOM Not Enabled | A DICOM communication was attempted, but the unit is not configured for DICOM. | Configure the system to DICOM and reboot. |
| UNABLE TO SAVE ECG | No available memory.<br><br>ECG data too noisy to store. | Press stop to continue. Transmit or mark records for deletion in the directory. Correct noise and try acquisition/storage again. |
| DHCP FAILURE | The WLAN module failed to get an address from DHCP. | Contact Welch Allyn Technical Service. |
| DPAC FAILURE | WLAN failed to initialize. | Contact Welch Allyn Technical |
| CAN'T CONNECT TO ACCESS POINT | A link to the access point could not be established. | Ensure the IP address is correct. If problem persists, contact Welch Allyn Technical Service. |

## Transmission Troubleshooting Chart (continued)

| LCD Message | Problem | Correction |
|---|---|---|
| CAN'T CONNECT TO REMOTE LINK | A link to the access point was established, but the link to the destination failed. | Ensure the IP address is correct. If problem persists, contact Welch Allyn Technical Service. |
| TIME SYNC FAULT | Possible incorrect version of ELI Link | Install latest version. |
| UNABLE TO SAVE ORDER | Order storage failed. | Attempt to retransmit orders. |
| UNABLE TO SAVE WORK ITEM | DICOM order storage failed. | Directory full; mark records for deletion or delete records. |
| INCORRECT RESPONSE | Connection established, then failed. | Connection started but failed; attempt to reconnect. |
| NO CUSTOM ID | Received orders failed. | Previous Custom ID not compatible with current Custom ID, or no Custom ID. |
| PAPER QUEUE FAULT | Unable to print.<br>Paper queue mark not detected as expected. | Add paper; manually advance page evenly past closure point of writer and close writer cover and press STOP. |
| CONNECTION FAILED | Unable to transmit or receive ECGs. | Check for correct baud rate, phone number, and cable connections or site number. |
| None | File not successfully transmitted via LAN. | Check share permissions on host device. |
| None | Unable to connect with LAN with crossover cable. | Implement hub vs. crossover cable. |
| Disabled | Pressing SYNC key | Enable SYNC MODE and/or set SYNC MEDIA in configuration |

## Touchscreen Troubleshooting Chart

| LCD Message | Problem | Correction |
|---|---|---|
| Screen is dark | The AC power cord is not connected to a grounded electrical outlet or is damaged. | Ensure that AC power cord is not damaged and is firmly connected to AC power connector on rear of electrocardiograph. Ensure that electrocardiograph is plugged into grounded electrical outlet. If AC power is being used and the AC power switch is set to the On position, but the AC power on indicator light does not illuminate and the display is still dark, contact Welch Allyn Technical Support |
| | Electrocardiograph is in Standby Mode | Press the On/Standby button to return to active use. |
| Touchscreen is unresponsive and taps appear on the touchscreen in a different position than the actual contact point. | Touchscreen needs to be calibrated | Repeat the touchscreen calibration procedure. |
| | | Disconnect the AC power cable from the wall outlet and depress the On/Off button for >7 seconds. Plug AC power cord into wall outlet and follow the instructions on the display. If problem persists, contact Welch Allyn Technical Support. |

## Power Off the Device

To completely shut down the device, disconnect the AC power cord then press the ON/OFF button. Such a shutdown should always be performed prior to authorized repair of the device.

## Test Operation

After cleaning and inspecting the device, proper operation of the unit may be confirmed by using an ECG simulator to acquire and print a standard 12-lead ECG of known amplitude. Printing should be dark and even across the page. There should be no evidence of print head dot failure (e.g., breaks in printing forming horizontal streaks). Paper motion should be smooth and consistent during printing. Waveforms should appear normal with proper amplitude and, without distortion or excessive noise. Paper should stop with perforations near the tear bar (indicating proper cue sensor operation).

## Recommendations to Biomedical Staff

Following any service to the device or when non-compliant operation is suspected, Welch Allyn, Inc. recommends the following procedures:

- Confirm proper operation.
- Perform testing to ensure continued electrical safety of the device (use IEC 60601-1, ANSI/AAMI ES 60601-1, or IEC 62353 methods and limits).
  - patient leakage current
  - chassis leakage current
  - earth leakage current
  - dielectric strength or insulation resistance (mains and patient circuits, mains and signal input/output part (e.g., USB), mains and protective earth)

## Battery Maintenance

The device houses an internal, sealed lead-acid battery. When installed, the battery has a shelf life of approximately six months without recharging. If the battery has been stored for a long period in a discharged state, it may not be able to regain its capacity even if it is recharged.

For information about replacing the battery, please refer to the device's service manual.

Welch Allyn, Inc. recommends that the device be plugged into AC power whenever possible to maximize battery life and for the user to develop a habit of recharging the battery before the unit indicates a "low battery" condition. (That is, reduced depth of discharge.) Battery life varies by how the battery is maintained and how much it is used. For improved battery life, keep the electrocardiograph plugged in when not in use.

The sealed lead-acid battery will provide optimum life when the unit is fully charged after each use. When the battery charge is depleted to its lowest level (10.6V), the device will automatically power down. To recharge a battery from its lowest level to 85%, 4 hours of recharging may be necessary. To reach 90%, 7 hours of recharging may be necessary. It may take longer to reach 100%. The device can be used with AC power while simultaneously charging.

# Cleaning the Thermal Printer

## To clean the printer

1. Disconnect the power source.
2. Thoroughly wipe the surface with a clean, lint-free cloth dampened with a mild detergent and water for general cleaning or use one of the above recommended agents for disinfection.
3. Dry the device with a clean, soft, dry, lint-free cloth.

## To clean the print head

***NOTE:*** *Do not let soap or water come into contact with the writer, plugs, jacks, or vents.*

1. Open writer door.
2. Lightly rub print head with an alcohol pad.
3. Wipe with a clean cloth to remove alcohol residue.
4. Allow print head to air dry.
5. Clean the platen by using adhesive tape. Apply the tape and pull it off. Rotate roller and repeat until entire roller is clean.
6. Clean cue sensor photo detector.

# Cleaning the Touchscreen

## To clean the touchscreen

1. Disconnect the patient
2. Clean the exterior surface of the unit with a damp cloth using a solution of mild detergent diluted in water.
3. After wiping, thoroughly dry off the unit with a clean, nonabrasive soft cloth or paper towel.