Baxter

Hillrom is a part of Baxter

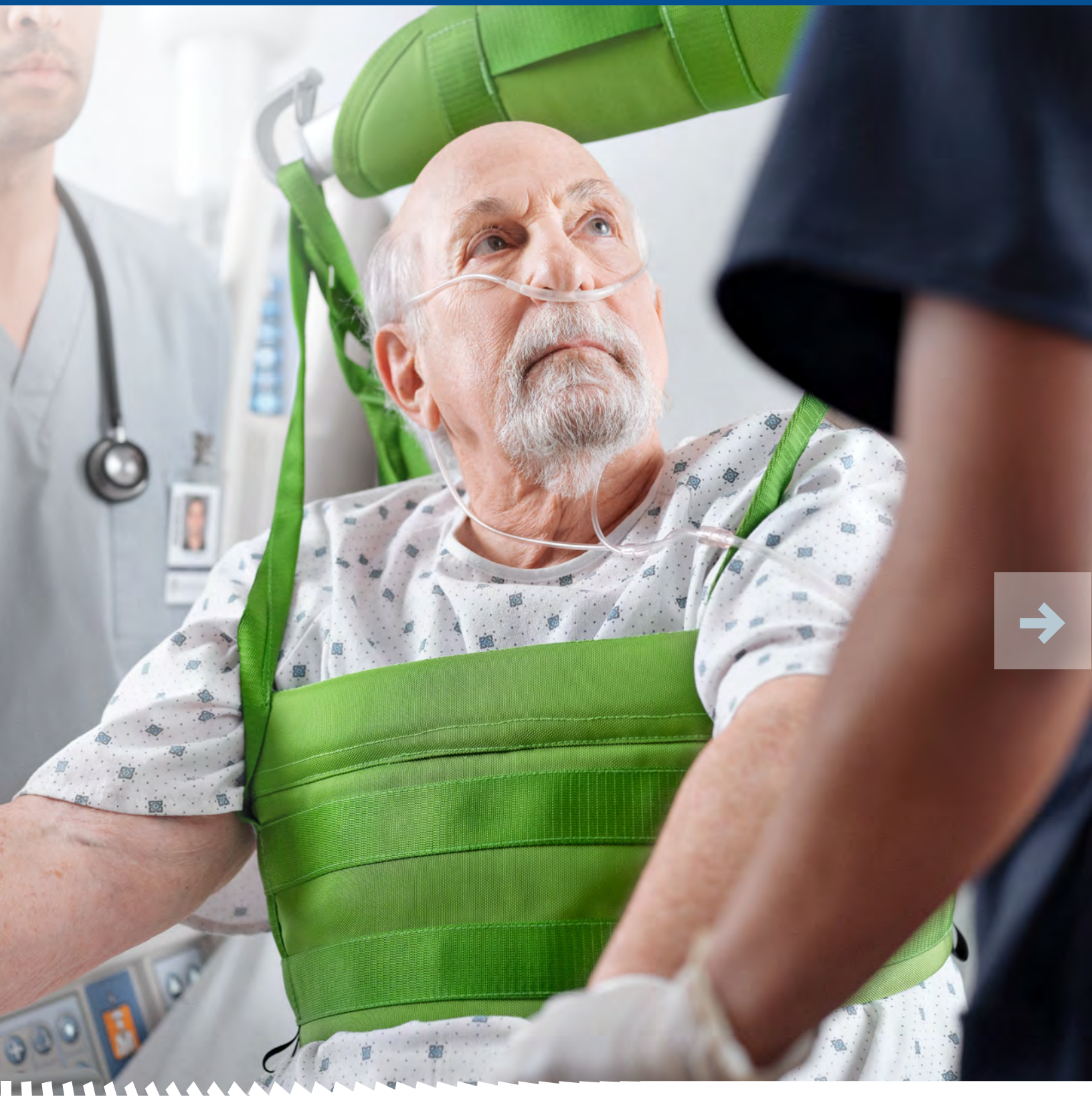

# Safe Patient Handling & Mobility

## Design and Planning Guide

# MAKING MOBILITY SAFER FOR PATIENTS AND CAREGIVERS

## Lifting, Repositioning, Transferring, Transporting

**THESE ARE ALL ESSENTIAL PATIENT-HANDLING TASKS CAREGIVERS LIKE YOU PERFORM EVERY DAY. BUT WITHOUT PROPER SUPPORT, THEY ARE ALSO POTENTIAL SAFETY RISKS.**

**AT HILLROM, OUR GOAL FOR SAFE PATIENT HANDLING AND MOBILITY IS TWO-FOLD:**

- Safely help patients get moving earlier and often
- Reduce the risk of injury for caregivers by helping them avoid high-risk patient handling tasks

To do this, we partner with healthcare providers, architects, and construction contractors around the world to plan and design custom lifting environments to help make every step safer. Our extensive portfolio of overhead, mobile and sit-to-stand lifts — along with 300+ accessories — is designed for care environments from pediatric to bariatric, and from critical care to rehabilitation.

DESIGN AND LAYOUT OPTIONS 4

PLANNING, DESIGN AND INSTALLATION 6

CEILING LIFT COVERAGE RECOMMENDATIONS 8

CEILING-MOUNTED LIFT SYSTEM CONFIGURATIONS OPTIONS

Med-Surg 10

Critical Care 12

OR 14

PACU/Recovery 15

Bariatric 16

Long-Term Care 18

OVERHEAD SYSTEM COMPONENTS 20

SLING AND LIFTING ACCESSORIES 30

SUPPORT 32

**Because we believe mobility and safety should go hand in hand. And we want to help you improve both.**

# DESIGN AND LAYOUT OPTIONS

**WE PUT CAREFUL CONSIDERATION INTO HOW OUR OVERHEAD LIFTS ARE INSTALLED, SO THEY ARE EASY TO USE WHENEVER YOU NEED THEM. IDEALLY, THIS MEANS COLLABORATING WITH ARCHITECTS, PLANNERS AND CLINICAL TEAMS IN THE INITIAL PLANNING STAGES.**

**In addition to technical specifications, consider the following questions when planning your lift environments:**

- What is the desired clinical outcome?
- What is the acuity level?
- What is the degree of patient dependency?
- What patient sizes will you need to support?
- What types of patient transfer, repositioning and lifting will be needed?
- What are your local regulations and policies for safe lifting?
- Is the room a "wet area?"
- How can the system complement the room's configuration and aesthetics?
- What other equipment will impact installation and use?
- What are the structural considerations (e.g., wall materials, obstacles, electrical source, mounting and installation)?
- What is your budget and expected return on investment?

## Once these questions are answered, it's time to choose the right equipment for each room.

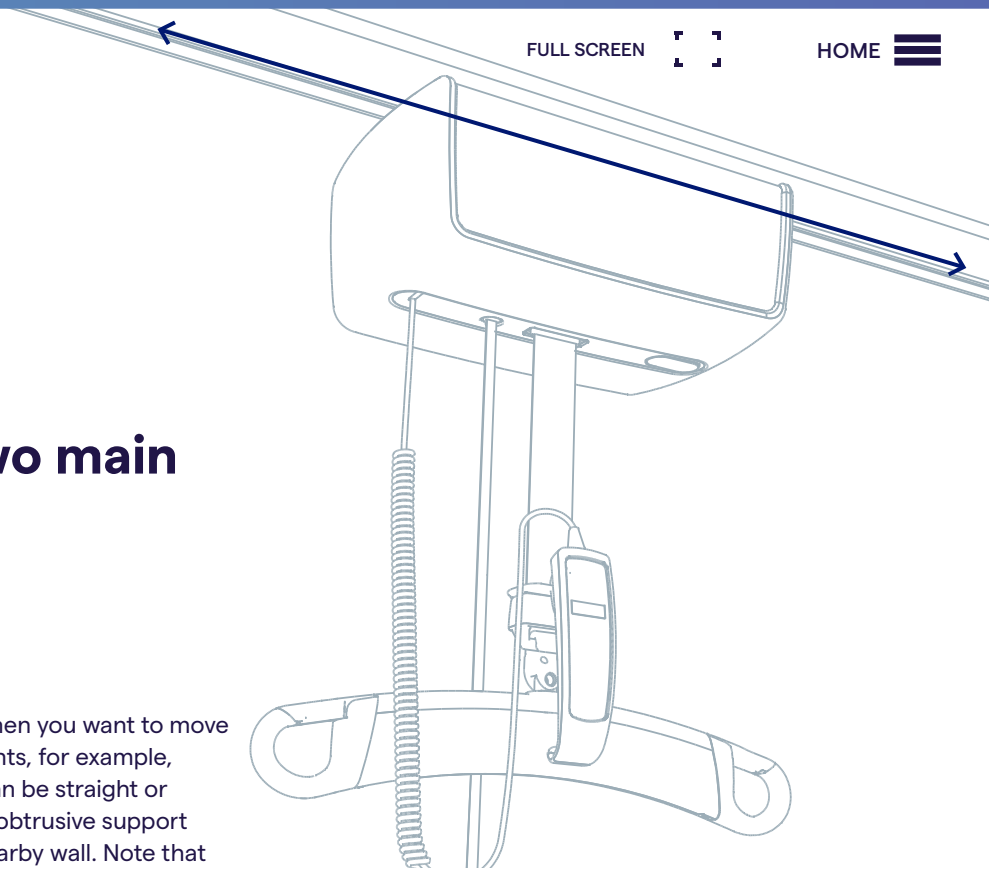

# Ceiling lift systems are available with two main installation options:

## 1 Fixed Rail

A fixed rail installation is ideal when you want to move a patient between two fixed points, for example, from a bed to a toilet. The rail can be straight or curved, and be installed with unobtrusive support legs, which are attached to a nearby wall. Note that a curved rail always requires a ceiling installation. In many care settings, a fixed rail is a simple, efficient and economic choice.

## 2 Traverse System

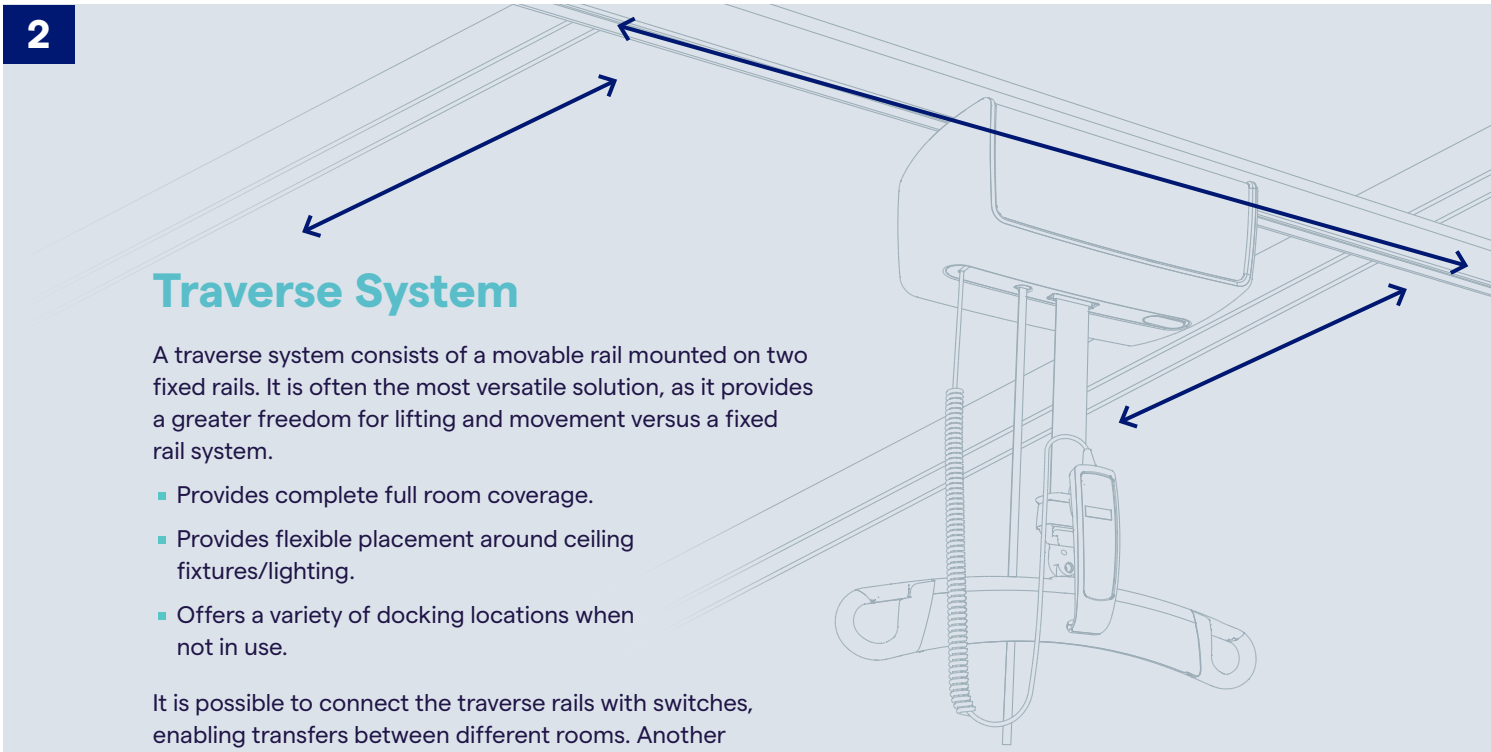

A traverse system consists of a movable rail mounted on two fixed rails. It is often the most versatile solution, as it provides a greater freedom for lifting and movement versus a fixed rail system.

- Provides complete full room coverage.
- Provides flexible placement around ceiling fixtures/lighting.
- Offers a variety of docking locations when not in use.

It is possible to connect the traverse rails with switches, enabling transfers between different rooms. Another advantage is that the lift automatically centers itself when lifting. The traverse system offers a greater ease-of-use and flexibility for patient care.

# PLANNING, DESIGN AND INSTALLATION

1

## Planning phase considerations

- The type of rooms that are targeted for ceiling lift installations e.g. ICU, MedSurg, LTC
- The type of lift system required e.g. straight rail, traverse system, traverse system connected to bathroom system
- The percentage of rooms requiring lift systems, as well as those requiring bariatric lifting capabilities

2

## The design phase

**Preliminary design** – When completing a preliminary design, you can use typical system designs shown later in this guide, or found on the Construction Portal website below.

If needed, Hillrom can provide a preliminary lift system layout in AutoCAD to overlay onto any building plans. Hillrom also offers standard room configurations in Revit which can be found on the Construction Portal at: **https://construction.hill-rom.com/en**

**Request For Quote (RFQ)** – If requesting a quote from Hillrom, please provide building plans in DWG or Revit format for all rooms requiring lift systems. If available, provide floor plans, RCP (Reflected Ceiling Plans), interior elevation details and building sections.

- Some locations may require a FF&E plan (furniture, fixtures and equipment) to ensure rail is aligned with furniture and avoid other obstructions.

**RECOMMENDATION:**

Hillrom recommends incorporating the lift system layout prior to designing the ceiling installation. Lift systems are typically aligned with the false ceiling grid and in some cases recessed into the false ceiling. They will require coordination with lighting, diffusers, sprinklers and other such equipment.

3

## Shop drawings and final coordination

**During this stage there will be:**

- Revision phase (if necessary)
- Shop drawings for project coordination process
- Final drawings and approval
- Installation (after final approval)

4

## Installation

**Note: Installation must be performed by a Hillrom certified installer in accordance with Hillrom specifications and applicable building codes.**

- Standard installation by Hillrom includes an installation schedule, to be determined based on mutually agreed plans prior to start
- The team will participate in project-related pre-installation meetings/calls per request
- Installation includes labor, attachment material, lateral bracing, and final load testing
- Charging station(s) installed as per plans
- Written load test report(s) certifying the lift system(s) ready for use

## CUSTOMER RESPONSIBILITIES:

- Verification of the integrity of the building structure to support the lift, certifying that said structure can support the weight of the lift system point loads
- Installation of electrical mains to provide power to the ceiling lift charger station(s)
- Certified engineering drawings, analysis and calculations*

**For projects in the US, Hillrom can provide this engineering of the patient lift attachment(s) for an additional fee for service.*

**By working and coordinating with Hillrom early in the construction design process, customers can ensure cost savings with other deliverables in the project such as:**

- Ventilation/HVAC
- Electrical services/IT
- Ceiling construction

# CEILING LIFT COVERAGE RECOMMENDATIONS[1*]

| Clinical Unit/Area | Ceiling Lift Patient/Bed Coverage** | Preferred Track Configuration | Min Weight Capacity |
|---|---|---|---|
| **CRITICAL CARE** | 100%<br>Depending on patient population, consider one or more rooms with expanded-capacity | Traverse | Standard<br>Expanded-capacity |
| | Lift should travel into toilet room | Traverse or Straight | Match lift type |
| MICU | 100% | Traverse | Standard and/or Expanded-capacity |
| SICU | 100% | Traverse | Standard and/or Expanded-capacity |
| ICU (combined MICU/SICU/CCU) | 100% | Traverse | Standard and/or Expanded-capacity |
| **DEMENTIA CARE/GERI-PSYCHIATRY UNITS** | These areas that do not treat actively suicidal patients may need overhead lifts. | Traverse or Straight | Standard and/or Expanded-capacity |
| **DENTAL** | Depending on patient population, one regular and/or one expanded capacity/bariatric lift | Straight or Traverse | Standard and/or Expanded-capacity |
| **HEMODIALYSIS**<br>▪ Ceiling lift coverage is required in areas where lateral transfers from stretchers or inpatient beds to dialysis beds occur. | 50-100% | Traverse or Straight<br>(One straight track over several bays in a row would be appropriate) | Standard<br>At least one Expanded-capacity |
| **EMERGENCY DEPARTMENT/URGENT CARE CENTER** | 100%<br>Depending on patient population, consider one or more rooms with expanded-capacity | **Preferred Design**<br>Traverse over multiple bays in a row or in private rooms.<br>**Alternate Design**<br>Straight track over several bays in a row or in private rooms. | |
| Ambulance Bay | One expanded capacity/bariatric lift under canopy in ambulance bay. Also consider in Vestibule area just inside the building. | Traverse | Expanded-capacity |
| **ENDOSCOPY FACILITY/DIGESTIVE DISEASES FACILITY** | Depending on patient population, one regular and/or one expanded capacity/bariatric lift | Traverse or Straight | Standard and/or Expanded-capacity |
| **HOSPICE FACILITY, NURSING HOME, REHABILITATION, AND OTHER LONG-TERM CARE FACILITIES (COMMUNITY LIVING CENTER)** | 100%<br>Less coverage may be provided for primarily dementia units | Traverse (Into Bathroom) | Standard and/or Expanded-capacity |
| **IMAGING/RADIOLOGY (X RAY, CT, ULTRASOUND, NUC MED, ETC...)**<br>▪ Overhead/ceiling lift system must be compatible with ceiling-mounted imaging equipment and able to accommodate at least the same weight capacity as the table.<br>▪ Careful consideration is required to avoid conflicts between ceiling lift tracks and gantries in radiology rooms with traverse ceiling mounted equipment. | 50-100%<br>Where substantial obstacles prevent overhead lift use in rooms, overhead lifts for patient transfers are recommended in nearby holding/ transfer areas. | Straight or Traverse | Standard |
| MRI | 100% | Straight<br>(Located in adjacent MRI patient transfer area) | |
| **MEDICAL/SURGICAL UNIT** | 100%<br>Lift should travel into toilet room | Traverse | Standard and/or Expanded-capacity |
| **MORGUE**<br>▪ Expanded capacity lift with minimum weight capacity of 600 lbs or greater depending on patient population characteristics.<br>▪ Include supine lift frame in purchase | 100% | Traverse or Straight<br>(Lift system should be able to assist in inserting and extracting trays into cooler as well as lifting and moving bodies into and within autopsy suite.) | Standard and/or Expanded-capacity |
| **NURSE TRAINING AREA** | One | Straight | Standard |
| **OBSTETRICAL FACILITIES** | | | |
| Multipurpose Exam Rooms | At least one standard lift | Traverse | Standard |
| Labor/Delivery/Recovery (LDR) | Depending on patient population, one regular and/or one expanded capacity/bariatric lift | Traverse | Standard and/or Expanded-capacity |
| **OUTPATIENT/PRIMARY CARE CLINICS** | | | |
| Exam / Multi-specialty Exam Room | At least one standard lift | Traverse | Standard |
| Special Care Multi-specialty Exam Room | At least one expanded capacity/ bariatric lift | Traverse | Expanded-capacity |
| Spinal Cord Injury Exam/Treatment Room | 100% | Traverse | Standard |

Standard lifts should have a minimum weight capacity of 500 to 600 lbs.
Expanded-capacity lifts for individuals of size should have a minimum weight capacity of 750 to 1,000 lbs.

| Clinical Unit/Area | Ceiling Lift Patient/Bed Coverage** | Preferred Track Configuration | Min Weight Capacity |
|---|---|---|---|
| **OUTPATIENT/PRIMARY CARE CLINICS** | | | |
| **Procedure Room** | 100%; At least one expanded capacity/ bariatric lift | Traverse | Standard and/or Expanded-capacity |
| **Physical Therapy/Treatment Area** | 100% | * Traverse design over exercise mats and throughout | Standard and/or Expanded-capacity |
| **Exercise Area** | 100% | ** Straight design over parallel bars walkway | Standard |
| **PEDIATRICS** | 20% | Traverse | Standard |
| **PSYCHIATRIC CARE AREAS** | Overhead lifts shall NOT be installed in behavioral health units with potential for actively suicidal patients | N/A | N/A |
| **RESPIRATORY THERAPY FACILITIES (PULMONARY MEDICINE)** | | | |
| **Bronchoscopy Procedure Room, Pre/Post-procedure area** | 100% | Traverse | Standard |
| **Sleep Study Room** | Depending on patient population, determine if lift is needed and lift type<br>If room has a lift, the lift should travel into toilet room | Traverse<br>Traverse | Standard and/or Expanded-capacity<br>Match lift type |
| **RADIATION THERAPY FACILITIES** | | | |
| **Radiation Therapy Room** | Minimum of one lift | Traverse | Standard |
| **Patient Stretcher in holding bay*** | *Install lift in holding area if lift cannot be installed inside the Radiation Therapy Room | Traverse | Standard |
| **REHABILITATION FACILITIES — INPATIENT (POLYTRAUMA REHABILITATION CENTER)**<br>▪ Provide one supine sling and hanger bar system for unit | 50-100%<br>If unit is primary neuro rehab, provide a minimum of 70% coverage.<br>For new construction or rooms large enough for ambulation within rooms, provide 100% coverage to assist in gait training, etc. | Traverse | Standard and/or Expanded-capacity |
| **Rehabilitation Gym** | 100% | Traverse or Straight | Standard |
| **Hallway for Rehabilitation with Ambulation** | 100% | Straight | Standard |
| **REHABILITATION FACILITIES — OUTPATIENT** | | | |
| **Physical Therapy, Occupational Therapy, or Kinesiotherapy Clinics** | 100%<br>*Full room coverage recommended | **Preferred Design**<br>Multiple but separate traverse systems covering specific areas, such as parallel bars and treatment tables.<br>**Alternate Design**<br>Straight Track installed over parallel bars, traverse track system covering treatment tables and activity areas. | Standard and/or Expanded-capacity |
| **SPINAL CORD INJURY UNIT - INPATIENT AREAS** | 100% | Traverse<br>*Lift coverage over the whole bed and transfer areas<br>*Bathrooms should also have separate Traverse track systems | Standard |
| **Surgery Facilities — Inpatient and Ambulatory Surgery Center** | 100% | Traverse | Standard |
| **Preoperative holding/ Phase II recovery** | 100% | Traverse | Standard and/or Expanded-capacity |
| **Procedure and Operating Rooms**<br>▪ Ceiling or wall-mounted equipment in ORs require careful consideration between lift tracks, traversing lift motors, and other equipment suspended from or mounted on ceilings and walls. | 100%<br>Depending on patient population, one or more expanded-capacity/bariatric lift may be needed | Traverse | Standard and/or Expanded-capacity |
| **Cath Lab** | 100% | Traverse or Straight | Standard |
| **Postoperative / PACU**<br>▪ Provide one supine sling and hanger bar system for unit | 100%<br>Depending on patient population, one or more expanded-capacity/bariatric lift may be needed | Traverse<br>(If possible, extended over all beds in a row using one lift system per row) | Standard and/or Expanded-capacity |

**Above are ceiling lift coverage recommendations by clinical unit/area. These recommendations should be considered advisory and are not intended to be used as regulatory or accreditation requirements. The information in this table; however, may be used to support overhead lift recommendations with consideration of patient needs by clinical unit/area. Insufficient coverage of patients or clinical unit/area presents a risk of injury for caregiver or patient.*

***Lifts with a scale are recommended; especially if your beds do not have one.*

# CEILING-MOUNTED LIFT SYSTEM CONFIGURATIONS OPTIONS

**MED-SURG**

## Basic Rail

A basic single rail lift system accommodates lifting directly below the rail. It is used to lift and move patients between two fixed points. The inclusion of a curve in the rail system is also possible, and allows for optional storage for the motor, into for instance a headwall or cabinet. To the right are examples of ceiling-mounted, standard single rail lift system configurations.

**BASIC SINGLE RAIL**

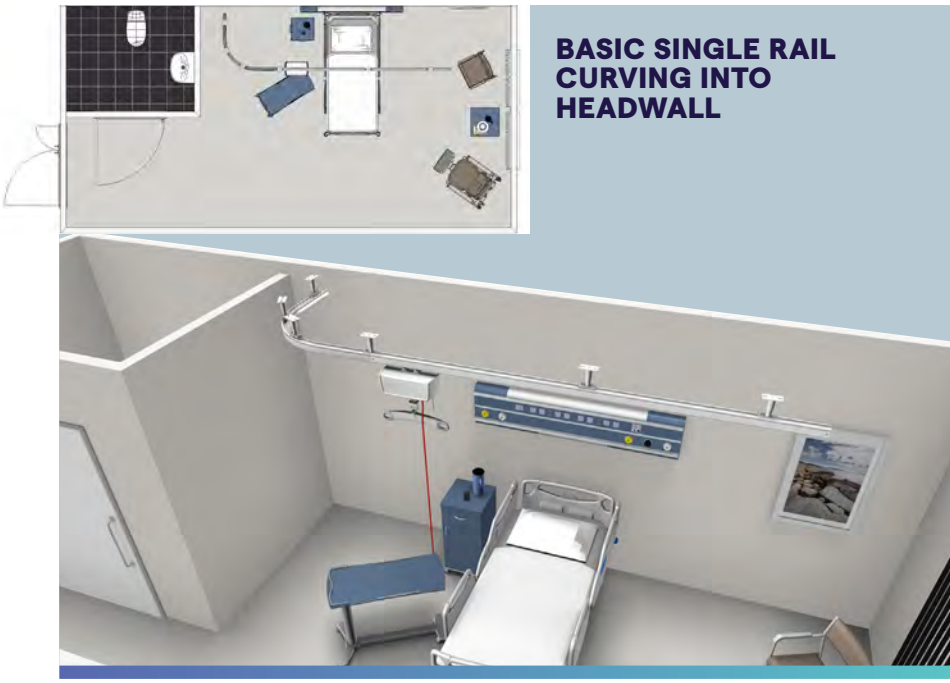

**BASIC SINGLE RAIL CURVING INTO HEADWALL**

***Note:*** *Not all configurations available are shown.*

## Traverse System

A traverse lift system consists of one traversing rail mounted on two fixed rails. This design covers a greater area for lifting and provides higher flexibility for patient transfers, interior planning and room/acuity scalability versus a basic single rail system.

As with other ceiling mounted rail systems, the traverse system allows for optional storage for the motor, into for instance a headwall or cabinet.

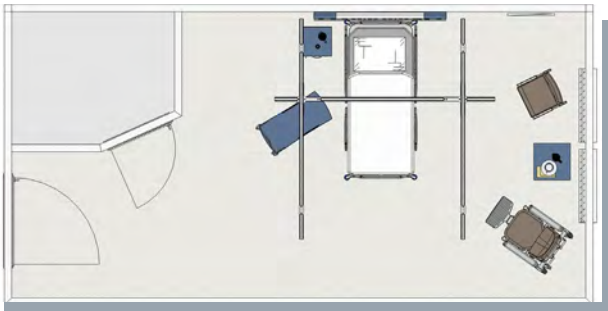

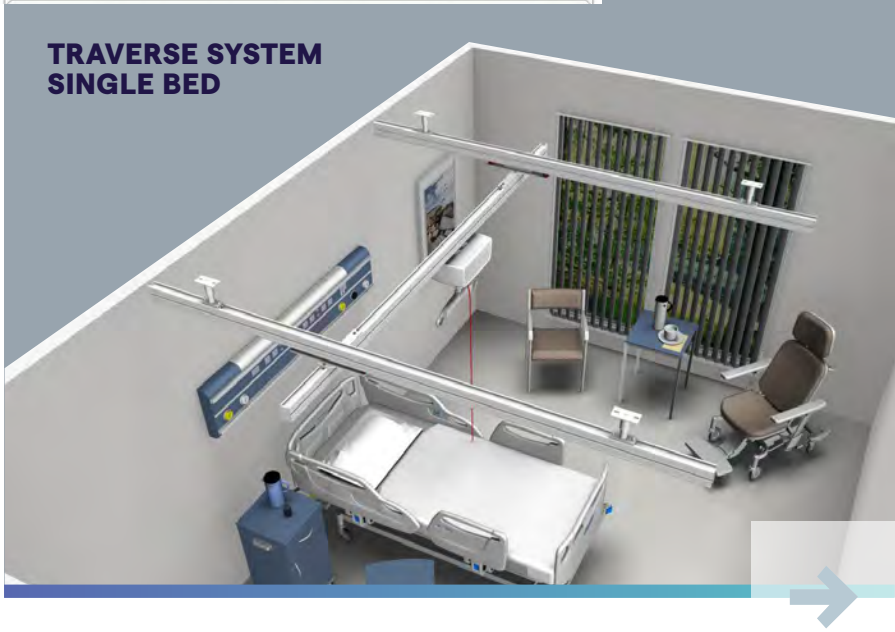


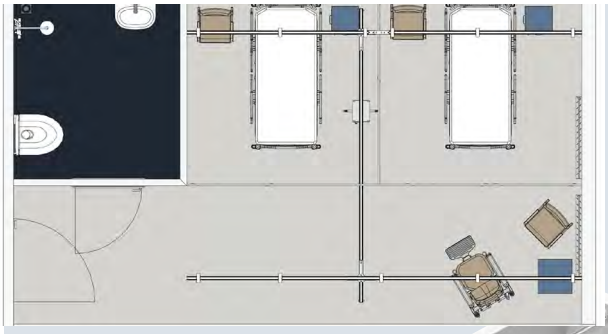

# Ceiling-Mounted Lift System Configurations Options

## CRITICAL CARE

Critical Care and Intensive Care Units care for the highest risk patients. Lift system configurations must be installed to accommodate a variety of tasks, including lateral transfer to/from stretcher, repositioning the patient in-bed, and mobilizing the patient in-bed, up-from-bed, and out-of-bed in a crowded space. The traverse rail system covering the patient room is the preferred layout in this care environment.

### TRAVERSE RAIL SYSTEM WITH THE TRUPORT CEILING SUPPLY UNIT

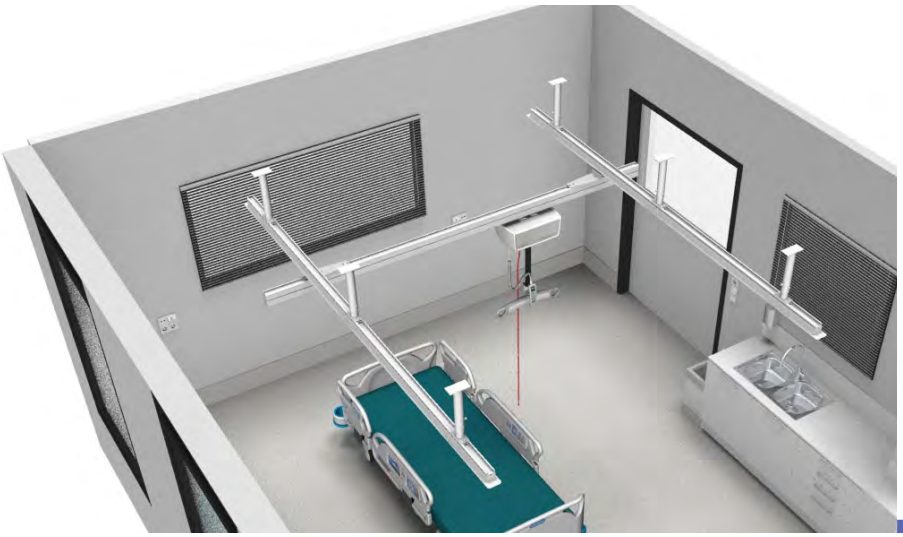

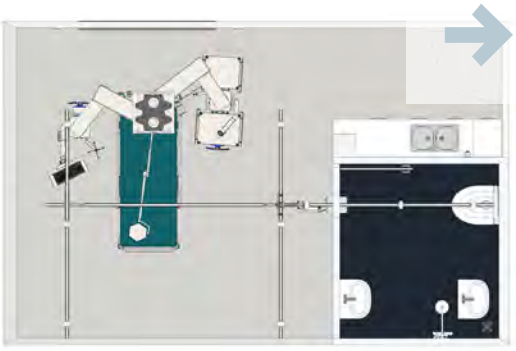

**TRAVERSE RAIL SYSTEM**

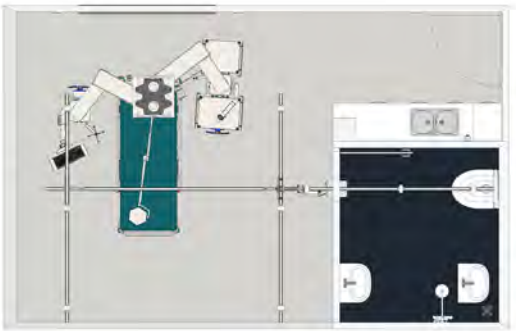

**TRAVERSE RAIL SYSTEM WITH THE TRUPORT CEILING SUPPLY UNIT, WITH PATIENT ACCESS IN BATHROOM**

# Ceiling-Mounted Lift System Configurations Options

## OPERATING ROOM

**TRAVERSE RAIL PATIENT LIFT – CEILING MOUNTED**

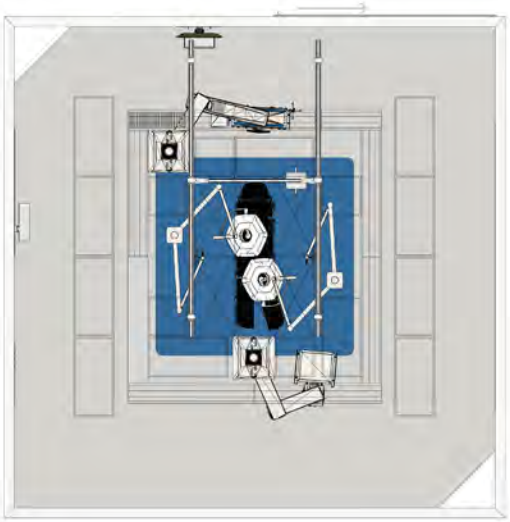

## MRI/CT ROOM

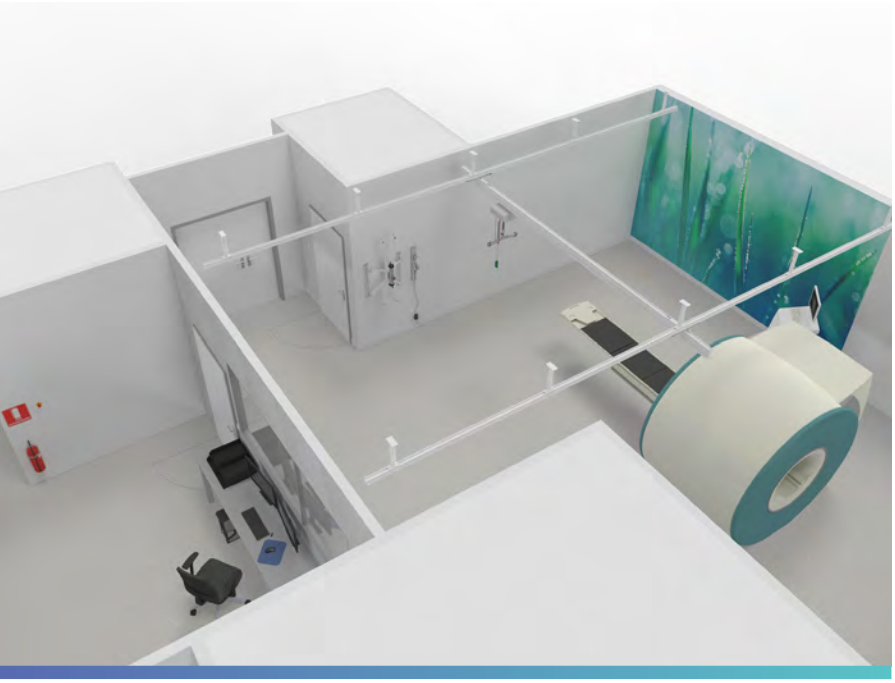

**TRAVERSE RAIL PATIENT LIFT – CEILING MOUNTED**

# PACU/RECOVERY

## STRAIGHT RAIL SYSTEM

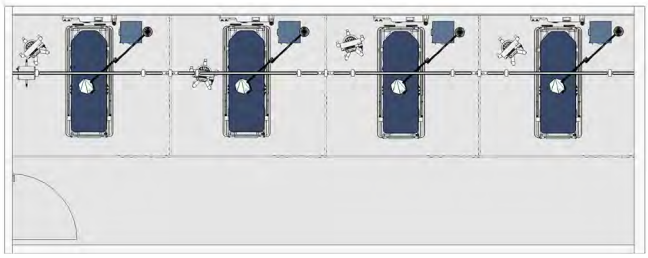

## TRAVERSE RAIL SYSTEM

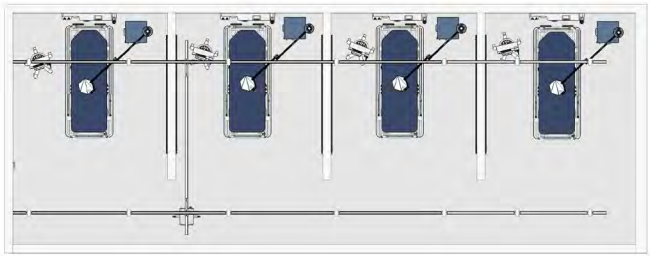

# Ceiling-Mounted Lift System Configurations Options

## BARIATRIC CARE

## Bariatric Considerations and Solutions

### IN ORDER TO RAISE AWARENESS OF THE CARE REQUIREMENTS FOR PATIENTS OF SIZE, ADEQUATE PLANNING AND DESIGNING OF APPROPRIATE LIFT SYSTEMS IS RECOMMENDED.

The Facility Guidelines Institute's (FGI) Patient Handling and Movement Assessment (PHAMA): A White Paper is an ideal resource for design teams looking to incorporate patient handling equipment into the healthcare environment.

The PHAMA has two distinct yet interdependent phases.

- The first phase includes a patient handling needs assessment which identifies appropriate equipment for each service area in which patient handling and movement occurs.
- The second phase includes definition of space requirements as well as structural and other design considerations that accommodate the incorporation of patient handling and movement equipment.[1]

**There are additional considerations in caring for patients of size beyond the higher lifting capacity. The US 2019 Facility Guidelines Institute (FGI) include recommendations such as:[1]**

- Provide a minimum clearance of 5 feet (152.4 cm) at the foot of the patient bed.
- Provide a minimum clearance of 5 feet 6 inches (167.4 cm) on the non-transfer side of the patient bed from the edge of the expanded-capacity patient bed.
- Provide on the transfer side the patient bed, a rectangular clear floor area parallel to the bed with these dimensions: (in patient rooms with ceiling or wall-mounted lifts)
  - A minimum of 10 feet 6 inches (3.2 meters) long, measured beginning 2 feet from the headwall
  - A minimum clearance of 5 feet 6 inches (1.68 cm) from the edge of the expanded-capacity bed.

## ULTRATWIN SYSTEM

Available in straight rail or traverse models, the UltraTwin system consists of two Likorall motors which, together, offer a lifting capacity of up to 500 kg / 1,100 lbs. And with the UltraTwist accessory, you can adjust the patient's position during and after the transfer.

### Tilt and Space

Dual motors can also help you tilt patients and allow more space for their girth. This means you can safely and easily tilt and angle your patient's position while they are suspended — all with hands-free repositioning. For bariatric patients, it makes a variety of patient mobility tasks safer and more efficient — including repositioning, turning, limb lifting, seated transfers and more.

## DUAL SINGLE RAIL ULTRATWIN SYSTEM

## TRAVERSE RAIL ULTRATWIN SYSTEM

## TRAVERSE RAIL ULTRATWIN SYSTEM WITH BATHROOM COVERAGE (Lowered Ceilings)

# Ceiling-Mounted Lift System Configurations Options

## LONG-TERM CARE

Below are examples of ceiling-mounted traverse rail systems providing complete room coverage in a resident room and bathroom. Option A provides full coverage, but requires the bathroom walls to be lowered 20 - 40 cm / 8 - 16". This option works well with a new construction project, and is an alternative to the use of switches or a turntable as shown in the other images.

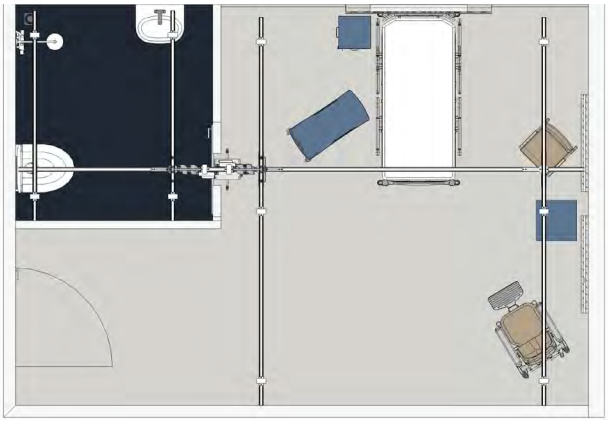

**TRAVERSE SYSTEM WITH RESIDENT ACCESS INTO BATHROOM**

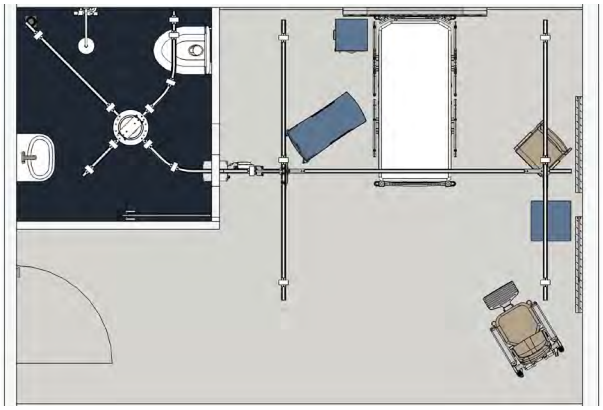

**TRAVERSE SYSTEM WITH RESIDENT ACCESS INTO BATHROOM WITH TURNTABLE**

## BASIC SINGLE RAIL SYSTEM WITH RESIDENT ACCESS INTO BATHROOM WITH TURNTABLE – CEILING MOUNTED

## BASIC TRAVERSE RAIL SYSTEM – WALL MOUNTED

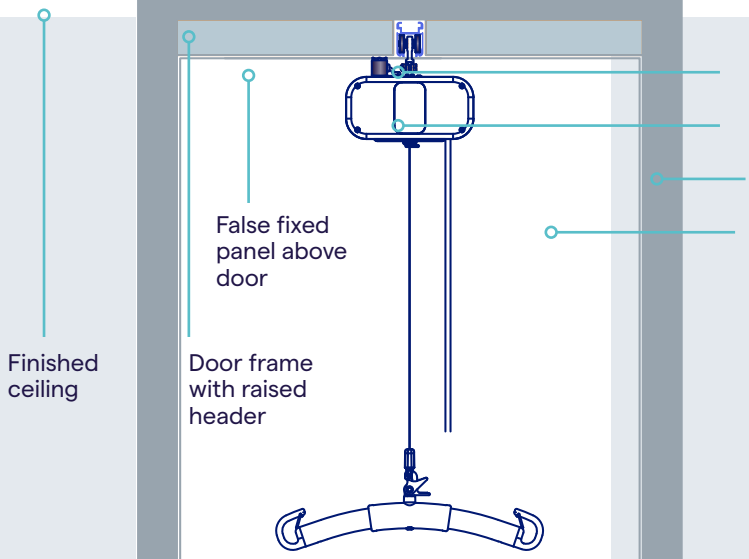


## RECOMMENDED CUSTOM DOORWAY APPLICATION

Image illustrates how the motor can pass in an opening made above the door.

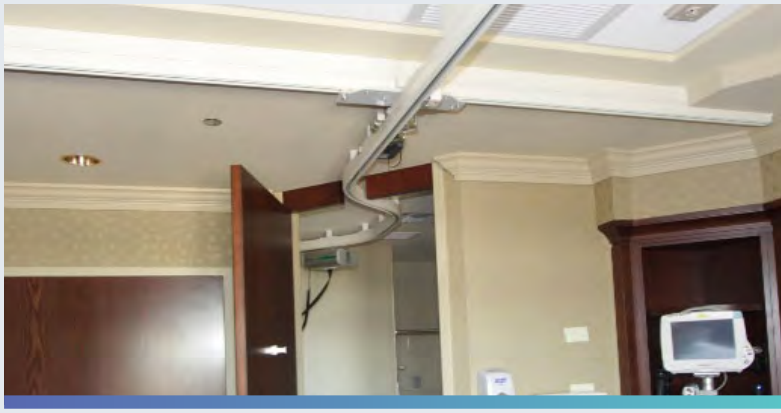

## ALTERNATIVE DOORWAY APPLICATION

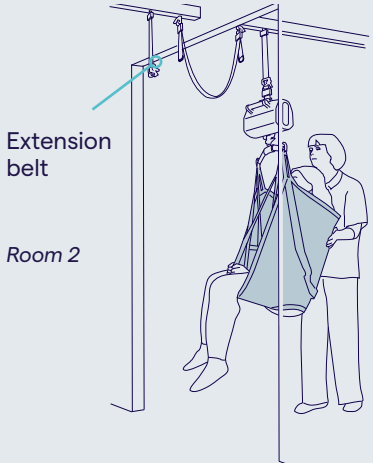

# OVERHEAD SYSTEM COMPONENTS

## ASSEMBLY EXAMPLES

### Acute Care Traverse System Assembly

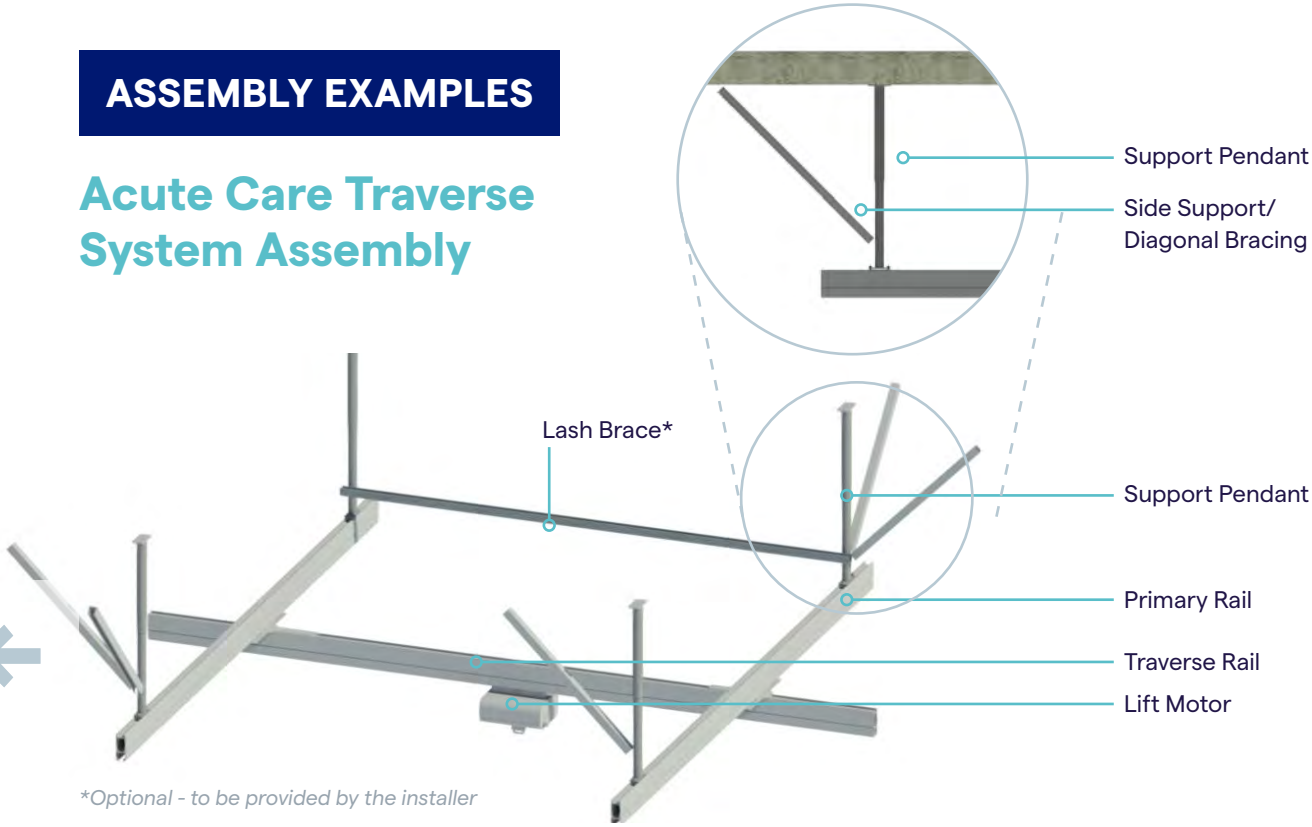


*Optional - to be provided by the installer

### Acute Care Single Rail "J" Track System Assembly

Support pendants are mounted onto the building structure (concrete, steelwork, wood framing, etc) using Unistrut or similar materials.

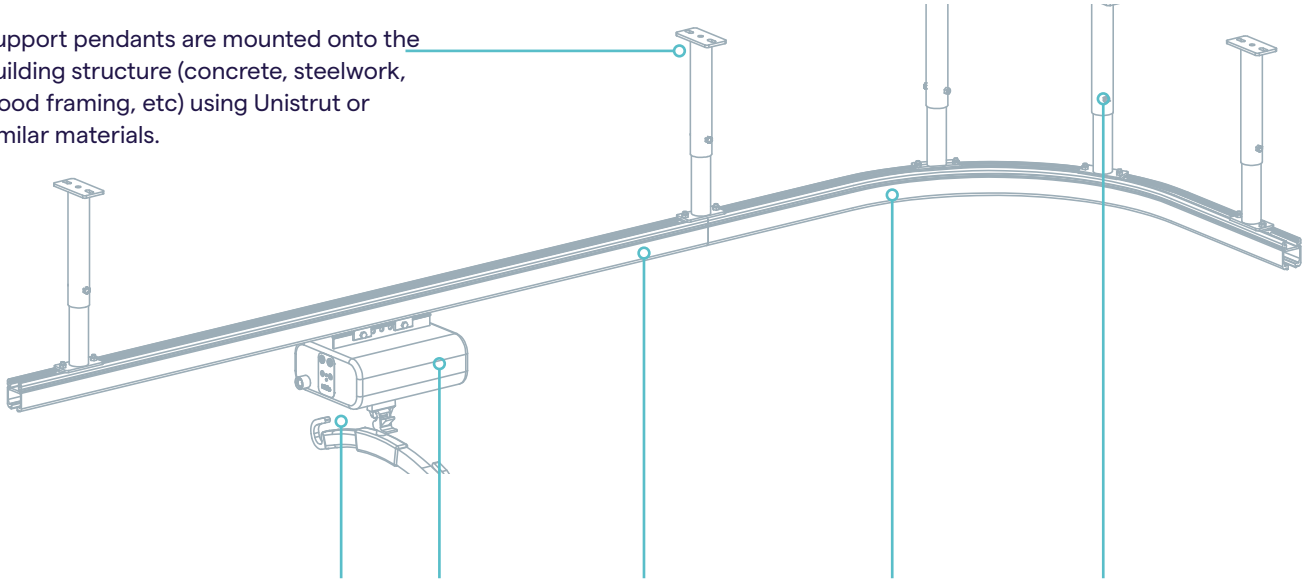

# LIFT MOTOR OPTIONS

## LikoGuard L/XL

LikoGuard is a family of overhead lifting motors, designed to provide safety you can trust and the performance you need. LikoGuard L has a maximum load of 272 kg / 600 lbs and XL a maximum load 800 lbs/363 kg. Both lift motors feature a lithium-ion battery, easy-to-reach manual lowering and emergency stop, an IPX7-approved hand control with optional graphical display, lift counter and the possibility of optional In-Rail charging.

## Likorall

Likorall is a family of overhead lifting motors with a lifting capacity from 200 – 250 kg / 440 – 550 lbs. The combination of unique technology, operational reliability and ease-of-maintenance, together with the wide range of accessories, makes it possible for Likorall to accommodate almost any lifting situation. All models are equipped with a patented safety drum, electrical emergency lowering and stop, lift strap with 10-fold safety margin and safety squeeze protection.

**Likorall 200**
Basic model

**Likorall 242S/ES and Likorall 242S/ES R2R**
Optional mechanical emergency lowering

**Likorall 250ES and 250S IRC**
Optional in-rail charging

## Multirall 200

The Multirall 200 is a portable overhead lift with a maximum load of 200 kg / 440 lbs that can also be used for room-to-room patient transfers — with just one lift motor. Its portability makes it an excellent and economical solution for care situations where lifting needs are temporary.

# Overhead System Components

## LIFT SYSTEM ATTACHMENTS

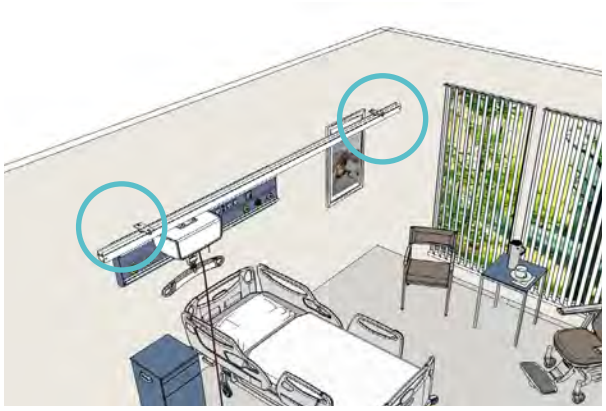

### FLUSH AGAINST A CONCRETE CEILING

With a concrete ceiling, fixtures can be installed directly. A variety of attachments are available to make installation easier.

A noise-dampening ceiling bracket can be used to minimize the spread of vibrations in the rail.

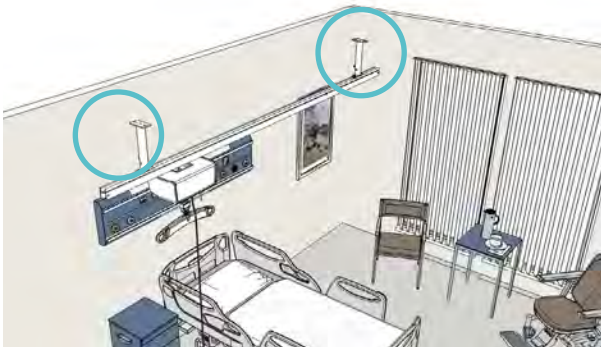

### PENDANTS IN A CONCRETE CEILING*

Another option is to install the rail under a false ceiling, with pendants from the concrete ceiling.

Pendants may also be utilized in the event that the ceiling is very high or if light fixtures block the rails.

Pendants are available in lengths of up to 2100 mm / 82".

**False ceiling not shown for illustration purposes.*

### WALL BRACKETS*

Wall bracket installations are an option in a room with concrete walls, where ceiling installation is not possible. They are also an option in rooms with framed plasterboard walls.

***Note:** Wall Brackets installations required coordination with construction/remodel efforts as reinforcement within building walls may be required.*

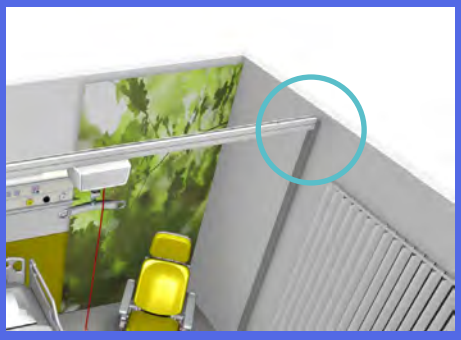

### UPRIGHT SUPPORTS

Another alternative when ceiling installation is not possible is an upright support. It has a minimal impact on the space and is easy to remove when the lift system is no longer needed. The upright support option accommodates surface-mounted pipes as well as existing skirting boards.

### FREESTANDING

A freestanding system can be used instead of a fixed overhead installation, allowing you to test an overhead lift without having to make alterations to the room. It offers an ideal solution when the lifting need is temporary and has no structural requirements on the ceiling or walls.

# Pendants

Pendants are the most common type of support used. They are adjustable in height and extend from the fixed rails to the building structure (concrete/steelwork) above ceiling.

**Pendant (adjustable):**

90 – 310 mm / 3.5" – 12.25"

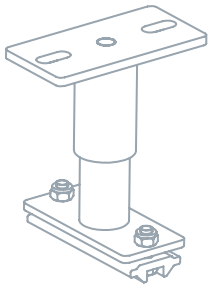

300 – 2100 mm / 12" – 82.5"

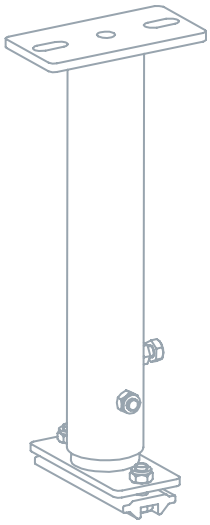

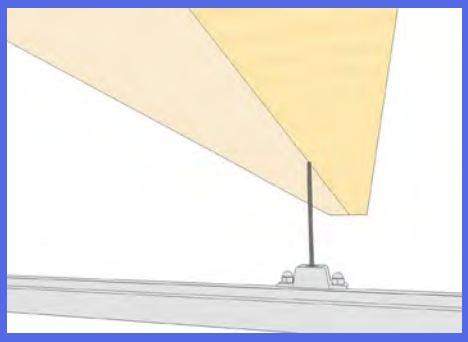

## WOOD JOIST CEILING

Wood joists are common in private homes. The rail is first suspended on brackets with a threaded steel rod attached through the joist (see image to the right), then mounted under a false ceiling.

# Ceiling Bracket/ Threaded Rod

Ceiling brackets are developed for ceilings with very few or no obstacles. Threaded rods are used mostly for attachments to wooden beams.

**Concrete applications**

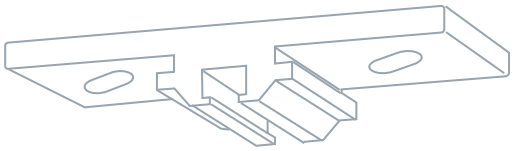

**Concrete or wood applications**

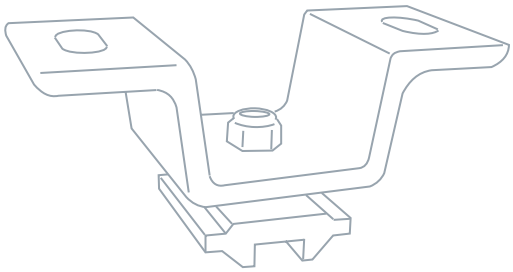

**Wood or steel applications**

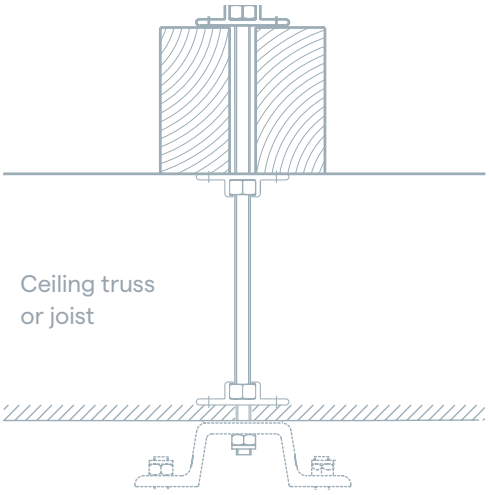

# Overhead System Components

## LIFT SYSTEM ATTACHMENTS

### Upright Supports

Rail attachment components for a suspended lift system are typically either wall brackets or upright supports. For both of these solutions, bayonet rails are necessary for the connection between the attachments and the rail.

**Slimline Upright Support:** Max Load 272 kg / 600 lbs

**Standard Upright Support:** Max Load 363 kg / 800 lbs

**Steel Upright Support:** Max Load 500 kg / 1100 lbs

SLIMLINE UPRIGHT SUPPORT WITH SUPERSTRUCTURE OVER DOORWAY

Installation with upright supports is ideal when neither the ceiling nor the walls can support the weight of a rail system or when the wall material is unknown. Upright support installation results in minimal changes to the room, and can be easily removed.

**Superstructure over window**

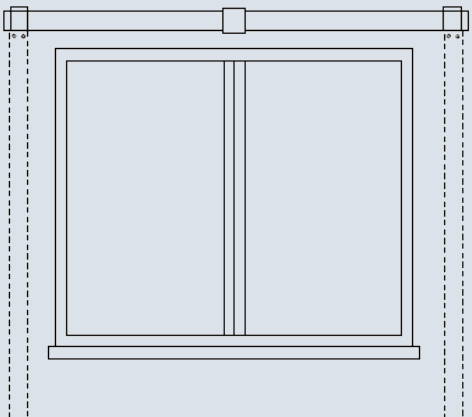

***Note:*** *Upright Supports are commonly used for existing buildings and renovations and offer simple and quick installation without requiring work above the ceiling space(s).*

# Wall Bracket

## WALL BRACKET INSTALLATION

Wall brackets are commonly used for new construction and more extensive renovations. Provides for a more aesthetically-pleasing look to the finished room.

**Wall Bracket – Parallel:***
Max Load 272 kg / 600 lbs

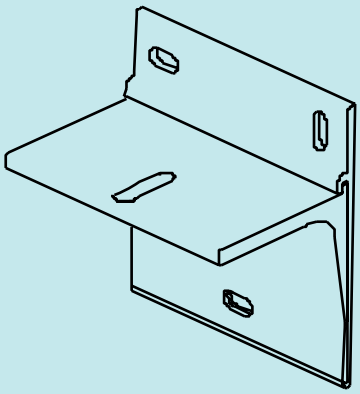

**Wall Bracket – Turntable:***
Max Load 272 kg / 600 lbs

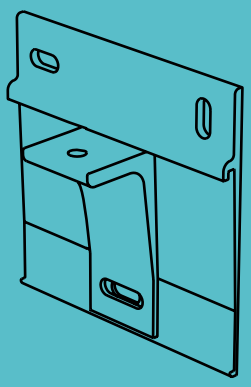

***Note:*** *Wall Brackets installations require close coordination with construction/remodel efforts as reinforcement within building walls may be required.*

# Overhead System Components

## LIFT SYSTEM ATTACHMENTS

### Rails

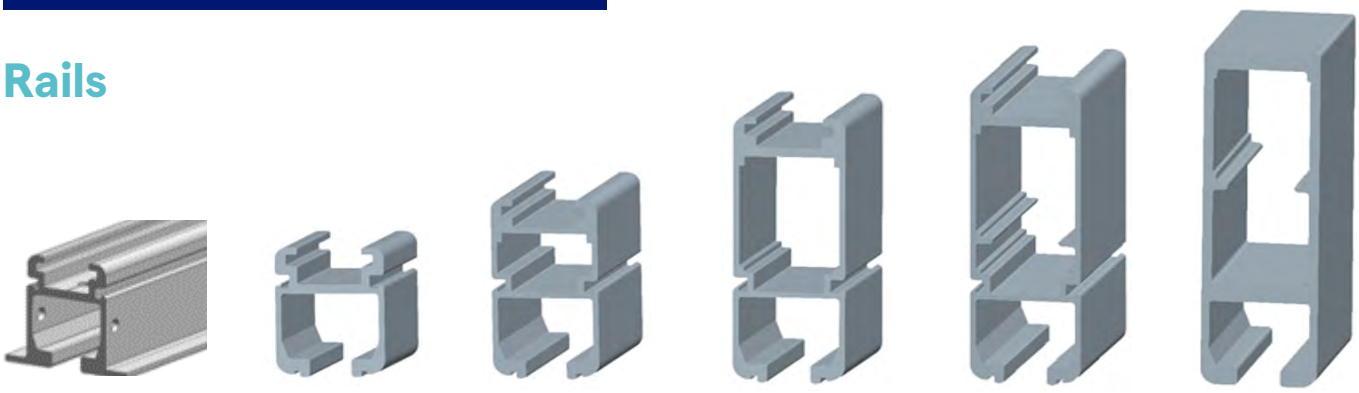

| EMB-H70* | H70 | H100 | H140 | H160 | H180 |
|---|---|---|---|---|---|
| 70 mm / 2.75" | 70 mm / 2.75" | 100 mm / 4" | 140 mm / 5.5" | 160 mm / 6.25" | 180 mm / 7" |

Lift rails from Hillrom are made of aluminum, and available in two colors (natural aluminum or white), ensuring installations blend more easily with the interior.

Rails are available in five different heights from 70-80 mm / 2.75 - 7.0" (shown above) with different weight-bearing capacities. The distance between the fixture points, as well as the required weight-bearing capacity, determine the choice of rail profile (height). Wide intervals between fixture points demand a deeper profile, while a ceiling-mounted rail with a short distance between fixture points can have a lower profile (for example H70).

EMB-H70* is used for installations where the rail is to be embedded in a drop-down ceiling. Embedded rails blend in more easily to the ceiling, offering enhanced aesthetics.

Keep in mind that individual rail systems from Hillrom have varied operational requirements. Contact a Hillrom representative for more details.

- Switches and turntables only work with an H70 rail profile
- 45° and 90° curves are only available with an H70 rail profile
- H180 cannot be pendant mounted
- H70 cannot be mounted with upright supports. However, this can be used with parallel wall brackets.

**Embedded Rail (EMB) options are currently not available for installations in the US and Canada*

### RECESSED PRIMARY RAILS APPLICATION

¼" or 1-¾" rail exposed below finished ceiling

# Curves

Curves can be used in ceiling-mounted systems using an H70 rail profile, and are available in 45° and 90°. They are also available as embedded curves, which can be used in suspended ceilings.

**45° rail curve H70**

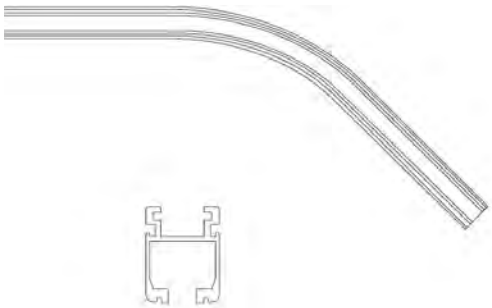

**45° embedded rail curve EMB H70***

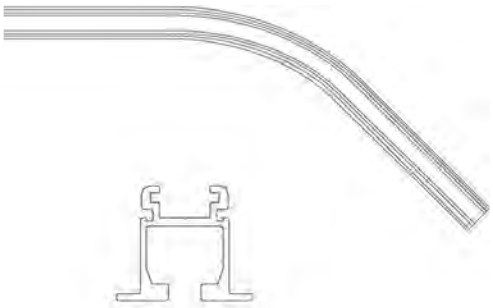

**90° rail curve H70**

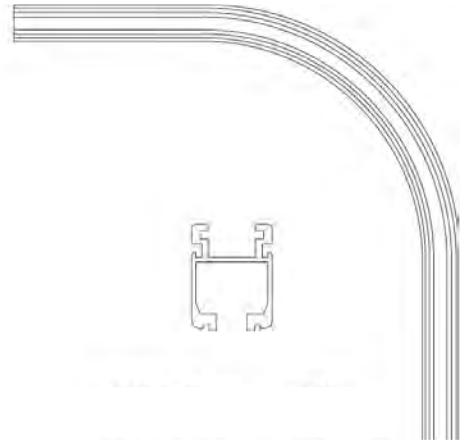

**90° embedded rail curve EMB H70***

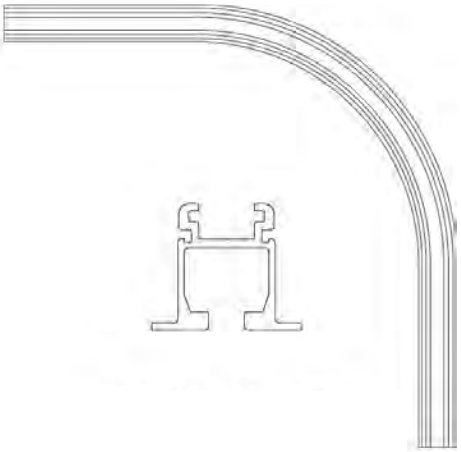

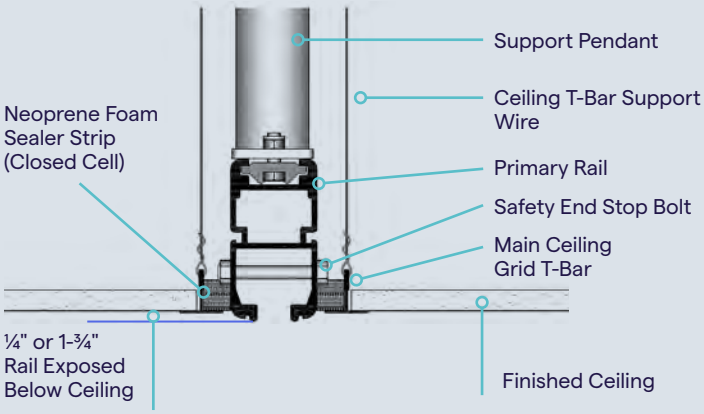


**IMPORTANT:** It is not recommended to adhere or attach the ceiling structure directly to the Primary Rail. During use the rail will deflect due to the lifting load. If the ceiling is adhered to the Primary Rail, then this normal deflection and may cause damage to the finished ceiling.

*NOTE: The 1-¾" Exposed Option allows for serviceability of the rail and motor carriages without requiring removal of any ceiling components. For the ¼" Exposed/Embedded Rail Options, a ceiling access panel is recommended to enable inspections, and for insertion and replacement of carriers and carriages.*

# Overhead System Components

## LIFT SYSTEM ATTACHMENTS

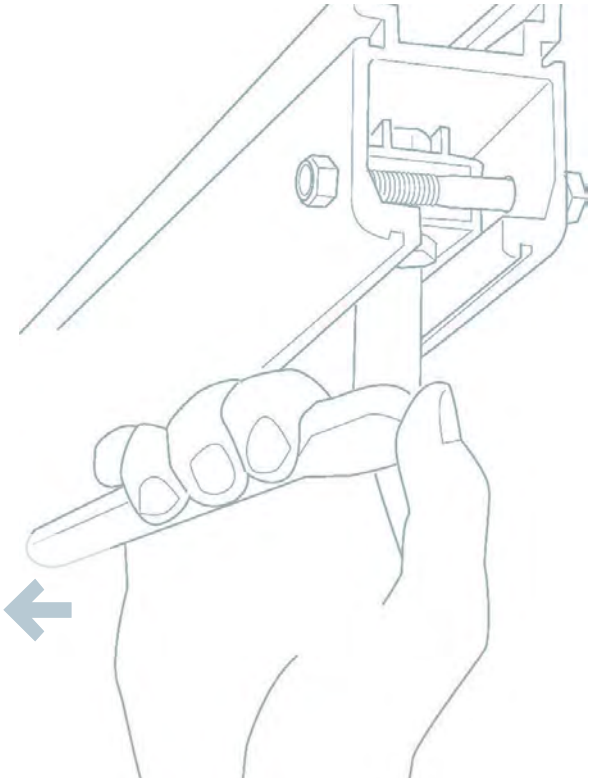

### End stop

The end stop is hidden within the rail and is designed to stop the motion of the lift motor. It can be adjusted to limit the range of the lifting area. An additional safety feature of the end stop is the safety bolt, which prevents the motor from accidental detachment from the rail system.

### Curtain supporting solutions

We provide a variety of curtain supporting solutions that work in conjunction with overhead lift systems, providing enhanced privacy.

### Solutions with switches

#### TRAVERSE SWITCH

Offers the ability to go from a fixed rail to a traverse system, for example, between different rooms.

#### TURNTABLE SWITCH

With a turntable switch, users have the ability to select tracks in four different directions.

### Traverse rail carriers

Hillrom offers a selection of traverse rail carriers for a variety of configurations. The distance between the fixed rails (which are the primary rails in a traverse system) determines the selected width of the traverse rail carriers. Selecting the correct width of the traverse rail carriers will ensure smooth and easy movement of the traverse rail.

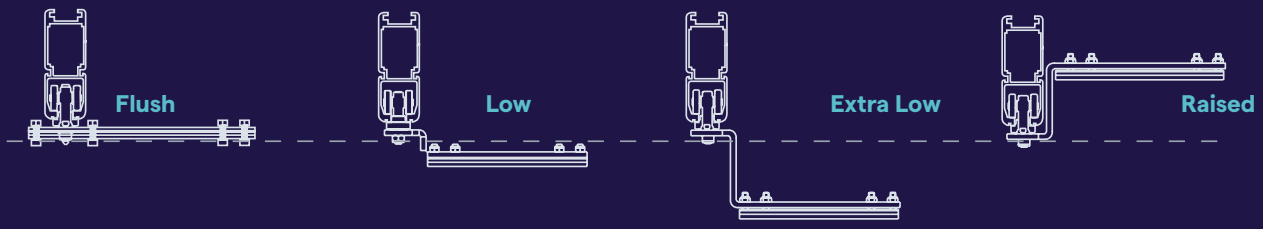


Traverse rail carriers are available for both raised and lowered secondary rails, helping to avoid other objects in the ceiling, such as sprinklers or lamps and offering a more aesthetic solution.

# Charging

## IN-RAIL CHARGING*

Hillrom in-rail charging means that the lift unit is constantly charged along the complete rail system and is always ready for use.

It can be fitted to all standard rail systems, as well as new or previously installed rails.

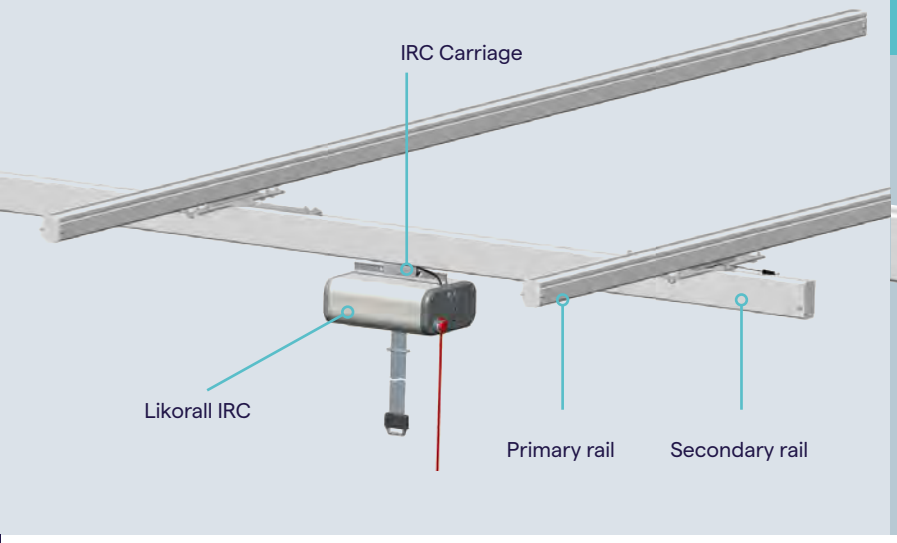


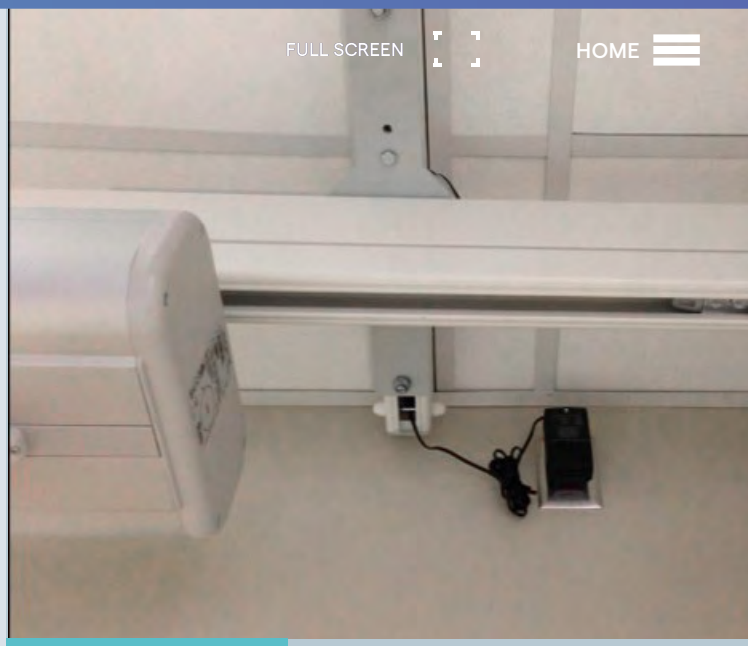

## CHARGING DETAIL

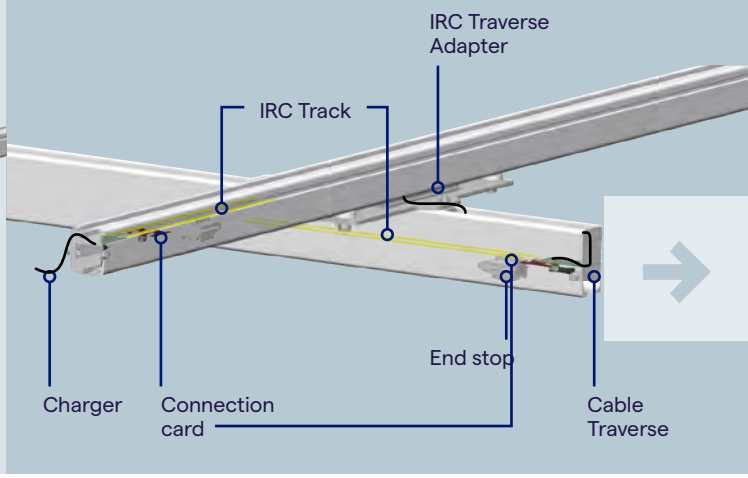


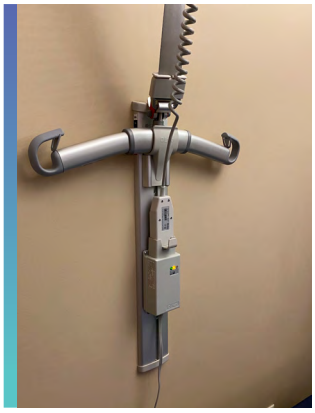

## WALL-MOUNTED CHARGING STATION*

With a wall-mounted charging station, the lift motor should be positioned above the charging panel, placing the hand control into the dedicated charging point. This panel is also equipped with hooks for hanging the slingbar and sling, and is available as a separate modular product.

## MULTISTATION – CHARGING ON THE RAIL (LIKORALL ONLY)

The MultiStation offers on-rail charging and allows the caregiver to operate rail switches and turntables via the motor's hand control. Charging takes place at a pre-selected point along the rail.

**Requires electrical power source near ceiling line. Charger cord length is 6 feet.*

# SLINGS AND LIFTING ACCESSORIES

## SLINGS

1

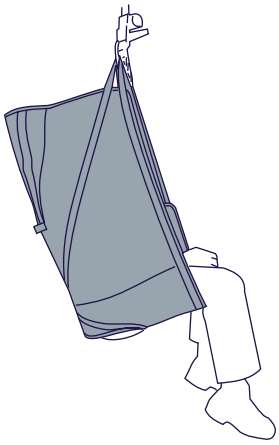

2

3

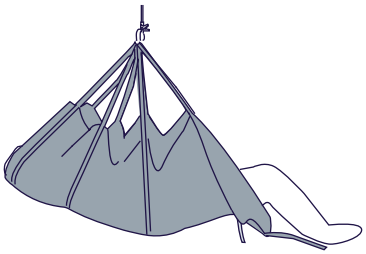

4

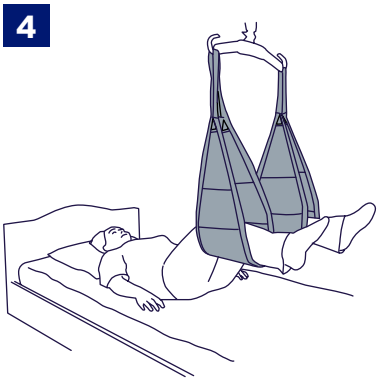

5

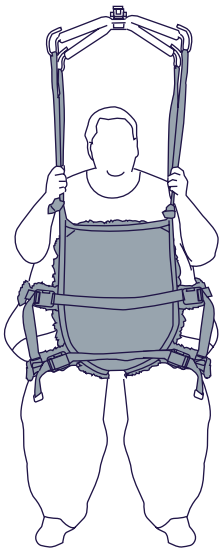

6

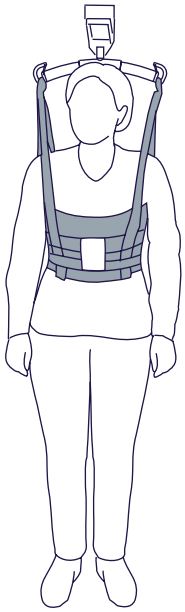

Our slings and accessories are designed for the many lifting requirements you face every day — from basic to highly specialized. Available in a variety of fabrics and sizes (from XXS to XXXL), we offer slings for repositioning, sitting, horizontal lifting, walking and bariatric care. And our accessories, from slingbars to scales, work with any Hillrom lift — so you can spend less time searching for equipment and more time caring for your patients.

1. HighBack Sling
2. UltraSling
3. Reposheet
4. MultiStraps
5. LiftPants Ambulation Support
6. MasterVest

## ACCESSORIES

- LikoScale
- Quick release carriage
- Paddy Cover

# SLINGBARS

Hillrom slingbars are suitable for a variety of lifting situations and patient needs.

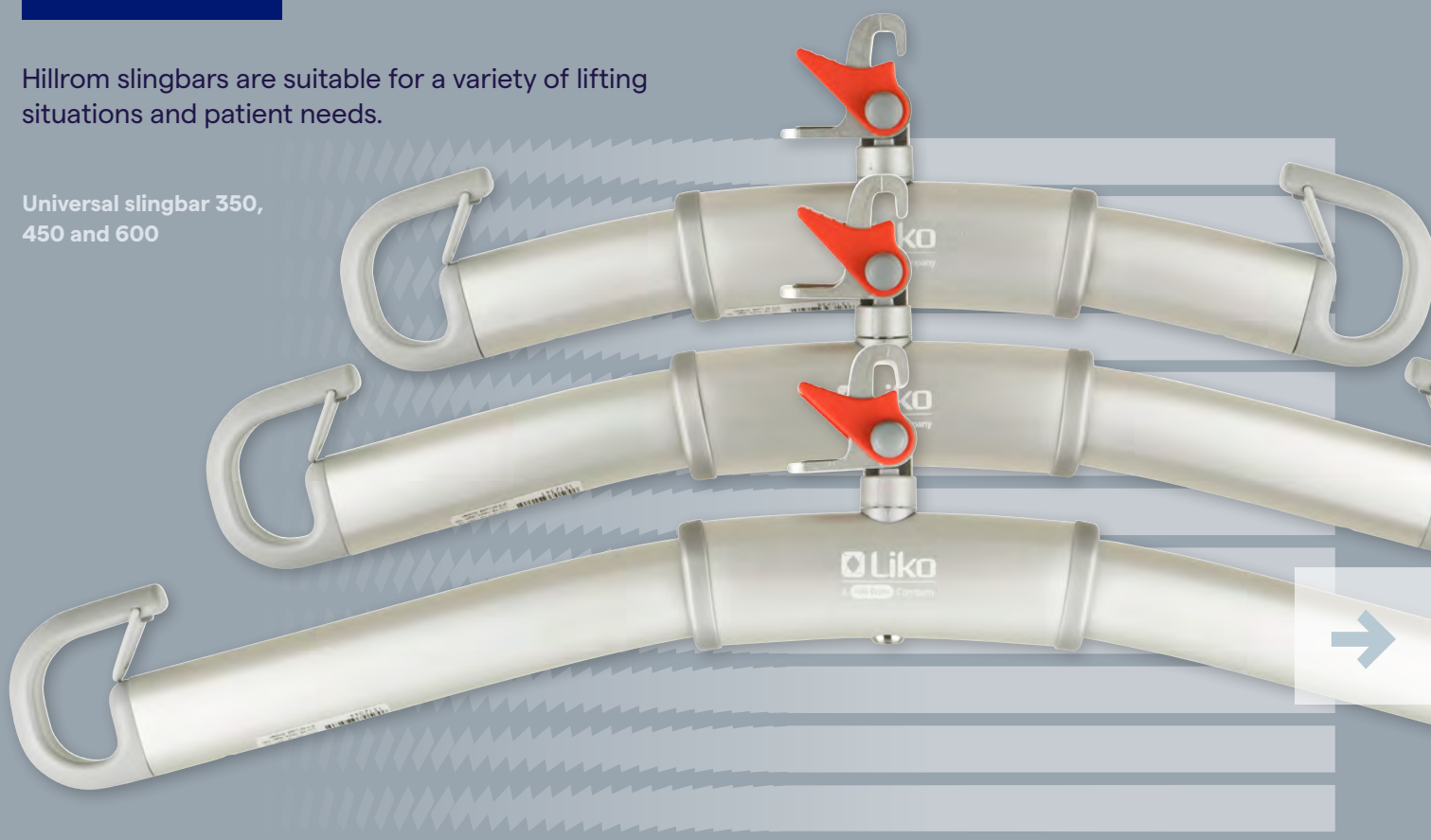


**Universal slingbar 350, 450 and 600**

**SlingGuard 450**
**SlingGuard 670 Twin** *(not shown)*

**Universal slingbar 670 twin**

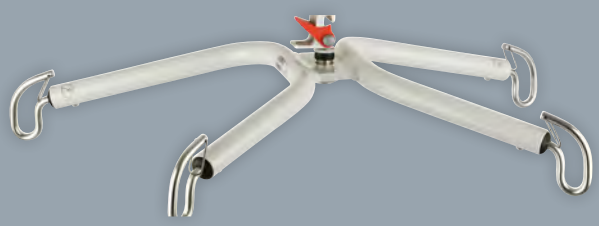

**Cross slingbar**

# SUPPORTING YOU EVERY STEP OF THE WAY

**At Hillrom, we're more than a lift manufacturer. We're your full-service partner — from planning to implementation and beyond.**

# Building a Smarter Future with Hillrom Construction Solutions

The Hillrom Construction Portal is a powerful tool for architects and healthcare facility designers. The resource center includes:

- Free, downloadable room layouts and DWG blocks
- Design specifications
- Videos, images and more

**SEE IT IN ACTION AT HILLROM.COM/CONSTRUCTION.**

## Safe Transfers and Movement Program (STAMP)

When smart solutions are backed by clinical evidence, better outcomes are possible. That's why we help providers like you implement evidence-based clinical programs focused on early mobility, falls prevention, skin safety and more.

## Bedside Mobility Assessment Tool (BMAT) 2.0

The Bedside Mobility Assessment Tool (BMAT) 2.0 is a validated tool to help nurses assess mobility at the bedside. At Hillrom, we offer CE programs, tools and assessment training aligned with the BMAT 2.0 principles and clinical application.

The goal? Helping you get your patients moving earlier and often — in the safest possible way. Talk to your Hillrom representative to learn more.

**LEARN MORE ABOUT BMAT AT HILLROM.COM.**

# IF YOU KNOW LIKO, YOU KNOW HILLROM.

**We've unified our brands to advance connected care. Visit us at hillrom.com.**

References

[1] Matz M, Celona J, Martin M, McCoskey K, Gaius N et al. Patient Handling and Movement Assessments Second edition. Dallas, TX: The Facility Guidelines Institute; 2019. www.fgiguidelines.org.

For more information, please contact your Hillrom sales representative at 1-800-445-3730.

**hillrom.com**

Hillrom range of lifts and accessories are intended to be used for the lifting and transferring of patients in a variety of care settings. Hillrom slings and accessories are intended to be used in combination with Hillrom lifts for a range of lifting and transferring situations in a variety of care settings.

Hillrom reserves the right to make changes without notice in design, specifications and models. The only warranty Hillrom makes is the express written warranty extended on the sale or rental of its products.

Baxter, Hillrom, HighBack Sling, Lift Pants, LikoGuard, LikoScale, Likorall, MultiStraps, Multirall, Reposheet, Safe Transfers and Movement Program, UltraSling and UltraTwin are trademarks of Baxter International, Inc. or its subsidiaries. APR238601 rev 2 21-NOV-2022 ENG–US